# SILICON CHIP

The BEST DIY Projects!

SEPTEMBER 2017
ISSN 1030-2662
09
9 771030 266001
PP255003/01272
$9.95* NZ$12.90 INC GST
112 Pages!

## Fully Adjustable Stereo 3-Way Active Crossover for Loudspeakers

## Ultra long-range radio:

drm

## DIGITAL RADIO MONDIALE

The answer for the outback?

## Superhet IF Alignment Unit

DDS makes it easy!

## FREE with this issue ALTRONICS

408 page 2017/2018 Build-it-yourself CATALOG AUST ONLY

## This month:

## CASSINI'S GRAND FINALE

## PLUS: 60 Years since Sputnik

Jaycar Electronics
Better, More Technical

duinotech

## PROJECT OF THE MONTH

Our very own specialists are developing fun and challenging Arduino®-compatible projects for you to build every month, with special prices exclusive to Nerd Perks Club Members.

# CODING SHIELD KIT TO HELP KIDS LEARN ARDUINO®

Kids can learn about Arduino® from a young age, but it can be cumbersome for them to wire up breadboards to complete a circuit, etc. Inspired by the learning programs by the clever team at the MAAS museum we've created our own coding shield that you can build with off-the-shelf Jaycar parts. Once assembled*, kids will be able to get LEDs flashing, buzzer buzzing, and turn them on and off in different ways, without any wiring. We provide some code on our website to get you going, or you could use the online resources made freely available on the Powerhouse Museum website. *Some soldering required

**VALUED AT $60.95**

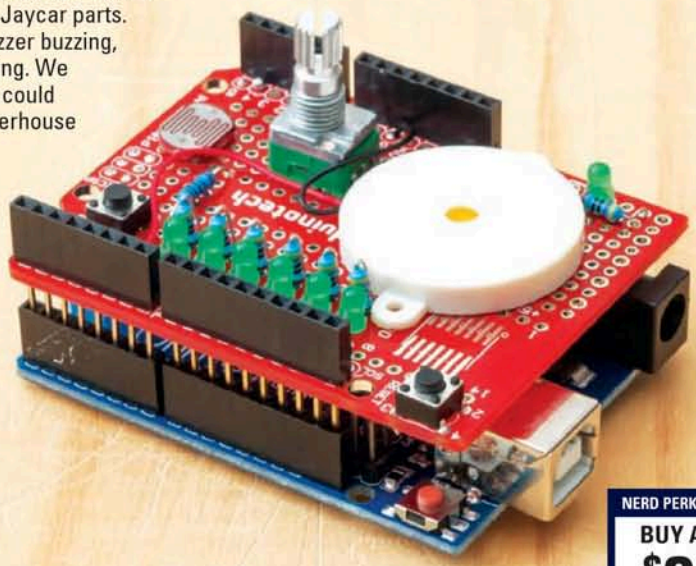

**SEE STEP-BY-STEP INSTRUCTIONS AT:**
**jaycar.com.au/coding-shield**

## WHAT YOU NEED:

| | | |
|---|---|---|
| 1 X ARDUINO UNO (FOR TESTING) | XC-4410 | $29.95 |
| 1 X PROTOTYPING SHIELD | XC-4482 | $15.95 |
| 7 X GREEN 3MM LED | ZD-0120 | $0.25ea |
| 1 X PIEZO TRANSDUCER | AB-3440 | $3.95 |
| 1 X TACTILE SWITCH | SP-0601 | $0.95 |
| 1 X LIGHT DEPENDENT RESISTOR | RD-3485 | $3.25 |
| 1 X 10K OHM POTENTIOMETER | RP-8510 | $3.50 |
| 1 X 8 PACK OF 470 OHM RESISTORS | RR-0564 | $0.55 |
| 1 X 8 PACK OF 1K OHM RESISTORS | RR-0572 | $0.55 |
| 1 X 8 PACK OF 10K OHM RESISTORS | RR-0596 | $0.55 |

NERD PERKS CLUB OFFER
BUY ALL FOR $39.95
SAVE $21

SEE OTHER PROJECTS AT www.jaycar.com.au/arduino

## MAKE A MEGA VERSION

**DUINOTECH MEGA**
XC-4420
Once you master the coding shield above, upgrade to our most powerful Arduino® compatible board. Boasting more I/O pins, more memory, more PWM outputs, more analogue inputs and more serial ports.
• 256KB program memory

$49.95

## ADD SOME MODULES

**DELUXE MODULES PACKAGE** XC-4288
Includes 37 commonly used sensors and modules for your Arduino® projects: joystick, magnetic, temperature, IR, LED and more.

$129

## ADD SOME PROTOTYPING SPACE

WC-6026

**150MM JUMPER LEADS**
Pack of 40 with various colours. Flexible with pins to suit breadboards or PCB headers.

| | |
|---|---|
| PLUG TO PLUG | WC-6024 |
| SOCKET TO SOCKET | WC-6026 |
| PLUG TO SOCKET | WC-6028 |

$5.95ea

NERD PERKS CLUB MEMBERS RECEIVE:
**20% OFF ENCLOSURES***
* Includes Sealed Polycarbonate, Potting Boxes, Jiffy, Bulkhead, Sealed ABS, Polystyrene boxes and Instrument Cases.

EARN A POINT FOR EVERY DOLLAR SPENT AT ANY JAYCAR COMPANY STORE* & BE REWARDED WITH A $25 JAYCOINS GIFT CARD ONCE YOU REACH 500 POINTS!
*Conditions apply. See website for T&Cs

REGISTER ONLINE TODAY BY VISITING:
www.jaycar.com.au/nerdperks

# Contents

Vol.30, No.9; September 2017

SILICON CHIP

www.siliconchip.com.au

## Features & Reviews

**16 Commemorating Cassini's demise and Sputnik's birth**
*The Cassini spacecraft will be deliberately plunged into Saturn this month, to certain destruction. It's had a remarkably successful mission. We also look at the world's first man-made satellite, Sputnik, 60 years on – by Ross Tester*

**40 This month: Melbourne's turn for Electronex Expo**
*Australia's only dedicated electronics design and assembly industry expo and conference returns to the Melbourne on September 6 and 7*

**61 The unclear future of radio broadcasting in Australia**
*Did you know the ABC turned off its shortwave transmitters in January, leaving vast areas of Australia without a viable radio service? AM, FM and DAB+ don't stand a chance – so where do we go from here? – by Alan Hughes*

**63 Digital Radio Mondiale (DRM): what's it all about?**
*DRM could be the solution for continent-wide broadcasting and beyond – with excellent quality and can even be in stereo. It's a much better proposition than anything else and its cost would be minimal – by Jim Rowe*

**78 LTspice Tutorial Part 3: Modelling an NTC Thermistor**
*We show how to simulate this tricky non-linear device – by Nicholas Vinen*

## Constructional Projects

**24 Fully adjustable, 3-way active loudspeaker crossover**
*Want more than a boring passive crossover? Build this one! The crossover points and levels for tweeter, midrange and woofer are fully adjustable with separate level controls for each driver – by John Clarke*

**66 Dead simple radio IF alignment with DDS**
*Gone are the days when aligning a superhet radio IF took lots of gear and time: this Maximite-based DDS module makes short work of it. And it's really simple! A must for all our (many!) vintage radio enthusiasts – by Nicholas Vinen*

**86 An Arduino Data Logger with GPS, Part 2**
*Here's the description of how the software works and how it all goes together with a custom shield – by Nicholas Vinen*

**92 Arduino "ThingSpeak.com" ESP8266 data logger**
*It's easy to log data to the cloud using an Arduino – by Bera Somnath*

**94 El Cheapo modules Part 9: AD9850 DDS module**
*It can be programmed to produce sine and square waves from 0.0291Hz to over 62MHz in tiny increments – by Jim Rowe*

## Your Favourite Columns

**36 Circuit Notebook**
*(1) Automatically rebooting NBN modem each night*
*(2) LIDAR rangefinder with Arduino*
*(3) Level shifting the output of the High-Temperature Digital Thermometer*

**73 Serviceman's Log**
*When a GPS loses its way – by Dave Thompson*

**100 Vintage Radio**
*The 3-transistor Philips MT4 Swingalong – by Ian Batty*

## Everything Else!

2 Editor's Viewpoint
4 Mailbag – Your Feedback
104 SILICON CHIP Online Shop
106 Product Showcase
107 Ask SILICON CHIP
111 Market Centre
112 Advertising Index
112 Notes and Errata

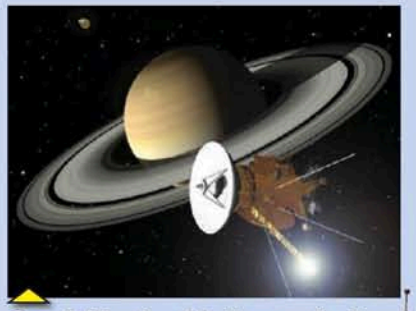

*Cassini is about to be crashed into Saturn's atmosphere, sending back valuable data until its last moments – Page 16*

*You may not have even heard of DRM – Digital Radio Mondiale – but it's already in use in many overseas countries. Why not here in Australia? – Pages 61/63*

*Repairing, restoring or even building AM superhet radios? You want this simple DDS IF Alignment Unit – Page 66*

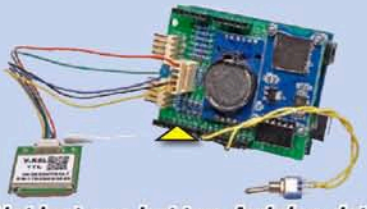

*Not just one but two Arduino data logger projects this month, including storing data in the cloud – Pages 86/92*

ElectroneX
electronics design & assembly expo

*Australia's largest electronics expo is on this month in Melbourne – and you're invited! Get your free entry at www.electronex.com.au – Page 40*

Find us on Facebook
www.facebook.com/siliconchipmagazine

SILICON CHIP
www.siliconchip.com.au

*Publisher & Editor-in-Chief*
Leo Simpson, B.Bus., FAICD

*Editor*
Nicholas Vinen

*Technical Editor*
John Clarke, B.E.(Elec.)

*Technical Staff*
Ross Tester
Jim Rowe, B.A., B.Sc
Bao Smith, B.Sc

*Photography*
Ross Tester

*Reader Services*
Ann Morris

*Advertising Enquiries*
Glyn Smith
Phone (02) 9939 3295
Mobile 0431 792 293
glyn@siliconchip.com.au

*Regular Contributors*
Dave Thompson
David Maddison B.App.Sc. (Hons 1), PhD, Grad.Dip.Entr.Innov.
Geoff Graham
Associate Professor Graham Parslow
Ian Batty

*Cartoonist*
Brendan Akhurst

SILICON CHIP is published 12 times a year by Silicon Chip Publications Pty Ltd. ACN 003 205 490. ABN 49 003 205 490. All material is copyright ©. No part of this publication may be reproduced without the written consent of the publisher.

Subscription rates: $105.00 per year in Australia. For overseas rates, see our website or the subscriptions page in this issue.

Editorial office:
Unit 1 (up ramp), 234 Harbord Rd, Brookvale, NSW 2100.
Postal address: PO Box 139, Collaroy Beach, NSW 2097.
Phone (02) 9939 3295.
E-mail: silicon@siliconchip.com.au

Printing and Distribution:
bluestar
Derby Street, Silverwater, NSW 2148.

ISSN 1030-2662
Recommended & maximum price only.

# Editorial Viewpoint

## A rapid shift to electric vehicles could be disastrous

Norway and the Netherlands have announced that they plan to ban the sale of vehicles powered by Internal Combustion Engines by 2025, Germany by 2030 and the UK by 2040. China is forcing automobile manufacturers to sell a percentage of vehicles as electric only and India is talking about banning the operation of petrol and diesel vehicles altogether in the future.

Leaving aside the question for now of whether it's feasible to manufacture the batteries required for all these vehicles in the time frames given, there are still two significant hurdles which are likely to frustrate these plans.

Firstly, electricity generation and distribution would likely need to increase by up to and 40% (depending on what assumptions you make) and most sources of renewable energy would not be suitable without backup, due primarily to mismatches between availability and demand.

Natural gas is currently in short supply in Australia, nuclear fission is unpopular and coal is actively being discouraged. That doesn't leave us a lot of options for providing the extra energy needed to run a large fleet of electric vehicles.

But there's potentially a more serious issue. Have any of the people behind these plans stopped to consider what would happen in the event of a natural disaster or a major disruption to the electricity grid? We all know from recent experiences that neither of these scenarios is unlikely.

These days, blackouts of relatively short durations (ie, up to a few hours) are frustrating but life can generally go on until the power comes back on. That may not be so if transportation becomes utterly dependent on the electric grid.

Worse, imagine what would happen if the power goes out for a week or more, due to a flood, cyclone, earthquake, major bushfire or similar event.

At the time of the disaster, some vehicles will have a fully charged battery that may be good for several hundred kilometres of travel. Some will have a smaller battery or be partially charged while others will be close to depleted.

How will people flee from the affected areas? How will food and medicine be delivered? How will debris be cleared and people rescued? Even if emergency vehicles were still liquid fuelled, they would have to bring their own re-fills.

Many are now saying that ICE-powered vehicles are obsolete but they do have some distinct advantages. Even if you don't keep your tank full, chances are you could drive a significant distance now if you absolutely had to. If you rely on an electric car, you'd better make sure to keep it charged in case you need it.

We tend to take for granted the huge, distributed network of petrol stations that we have. This network stores a lot of energy, is widely distributed and always available. There are challenges pumping fuel in a blackout but it can be done, while electric charging stations are utterly useless when the grid is down.

And petrol stations can be also replenished during a blackout, as long as road access is still available. We haven't even mentioned (and don't really want to think about) the potential effects of a coordinated terrorist attack on power supply infrastructure in a city with electricity-dependent transportation.

Plug-in hybrids are a much better compromise than pure electric vehicles, with the possibility of dramatically reducing fuel consumption without being totally dependent on a functioning grid. They also make good financial sense. But banning petrol-powered vehicles would eliminate this option.

Perhaps electric charging stations should have backup generators. Sure, they would not be able to charge many vehicles at a time but at least transportation would not grind to a complete halt if the grid goes down for some time.

We wonder whether the central planners who are trying to ban ICE vehicles have thought of and solved all these problems, or if they're just taking a "damn the torpedoes" attitude for which many innocent people may suffer when the inevitable "unexpected" disaster occurs.

**Nicholas Vinen**

**FREE SHIPPING** ON QUALIFIED ORDERS*

"I have been blown away by the **TREMENDOUS CUSTOMER SERVICE** and **AMAZING RESPONSE TIME** of your staff."
**NEW DIGI-KEY CUSTOMER IN 2016**

"**OUTSTANDING JOB** being my **FAVORITE ELECTRONICS SUPPLIER.** The major reason for this is your simple, fast-loading, no-nonsense website."
**NEW DIGI-KEY CUSTOMER IN 2016**

# What **OUR CUSTOMERS** are Saying...

"I am writing to say **THANK YOU,** and to compliment your web site, live chat personnel, customer service practices, shipping operations, and product selection... Every time I have needed to find a specific part, **DIGI-KEY HAS WHAT I AM LOOKING FOR.** The ordering site makes it easy to drill down and find the right components... All of my interactions with Digi-Key have demonstrated the company to be **AMONG THE MOST PROFESSIONAL, WELL-RUN ESTABLISHMENTS I DO BUSINESS WITH.**"
**DIGI-KEY CUSTOMER SINCE 2015**

**AUSTRALIA**
**DIGIKEY.COM.AU**
**1800 285 719**

**NEW ZEALAND**
**DIGIKEY.CO.NZ**
**800 449 837**

Digi-Key® ELECTRONICS

6 MILLION+ PRODUCTS ONLINE | 650+ INDUSTRY-LEADING SUPPLIERS | 100% AUTHORIZED DISTRIBUTOR

*Australia: A shipping charge of $24.00 AUD will be billed on all orders of less than $60.00 AUD. A shipping charge of $20.00 USD will be billed on all orders of less than $50.00 USD. All orders are shipped via UPS, Federal Express, or DHL for delivery within 3-4 days (dependent on final destination). No handling fees. All prices are in Australian dollar or United States dollar. **New Zealand:** A shipping charge of $26.00 (NZD) will be billed on all orders of less than $66.00 (NZD). A shipping charge of $20.00 USD will be billed on all orders of less than $50.00 USD. All orders are shipped via UPS for delivery within 3-4 days (dependent on final destination). All prices are in New Zealand dollar or United States dollar. Digi-Key is an authorized distributor for all supplier partners. New product added daily. Digi-Key and Digi-Key Electronics are registered trademarks of Digi-Key Electronics in the U.S. and other countries. © 2017 Digi-Key Electronics, 701 Brooks Ave. South, Thief River Falls, MN 56701, USA

eda MEMBER ecsn CEDA

# MAILBAG – your feedback

Letters and emails should contain complete name, address and daytime phone number. Letters to the Editor are submitted on the condition that Silicon Chip Publications Pty Ltd may edit and has the right to reproduce in electronic form and communicate these letters. This also applies to submissions to "Ask SILICON CHIP", "Circuit Notebook" and "Serviceman".

### Why are the SPICE tutorials based on the SoftStarter?

I have a resounding Bravo for Nicholas Vinen for his introduction of LTspice XVII in your recent issues! But why the obsession with his passively-represented SoftStarter circuit with pages elaborating on a relay, with a thermistor to follow (or am I just getting impatient)?

Interesting as these may be, the SPICE acronym, with its deliberate emphasis on ICs, begs for an introduction to designing and testing amplifiers, active filters, oscillators, precision rectifiers etc, and delving into AC circuit analysis, Bode plots and the like.

Such an approach could help your August correspondent Andrew Pullin, with whom I sympathise. As to Andrew's appeal for introductory topics in your magazine, I remember being helped and encouraged in my youthful studies by *Wireless World* magazine, now sadly missed.

*Wireless World* struck a happy balance between assumed basic knowledge (now copiously available on the Web), step-by-step constructive design and polished circuits with detailed walkthroughs and constructional information. SILICON CHIP does this rather well but to my mind could improve on the former, more basic aspects.

Of course, we never cease learning, especially with the tsunami of technological progress. So my question to Nicholas asks if there is a convenient way to correlate the various SPICE-coded ICs with conveniently available retail items? It would greatly ease the path from simulation to actual prototype construction.

**John Gale,**
**Beecroft, NSW.**

*Nicholas replies: I started with the SoftStarter circuit because I thought it would provide a gentle introduction for beginners to SPICE, with its relatively simple circuit, as well as an opportunity to delve into the inner workings as we build the relay and thermistor models. I also wanted to show how handy it is to be able to simulate circuits at mains potential, since it's so difficult (and dangerous) to probe the real device.*

*Relays are arguably the single most common and useful component missing from LTspice, so I thought it would be considerably helpful to readers to provide a working model as well as take them through the process so they can understand how to build their own subcircuits for other components that are missing from the libraries.*

*The Thermistor model, published this month, turned out to be a great (albeit complex) vehicle for delving into the more esoteric parts of SPICE and many of the building blocks and techniques demonstrated in that article will be handy for simulating many other types of devices and ICs.*

*As stated at the end of the this month's article, we will get into audio circuits and ICs (especially op amps) in the next SPICE tutorial. We will also describe simulating filters and doing AC circuit analysis. Over time, we hope to cover all the useful aspects of LTspice, so that readers are confident in simulating their own circuits (and ours too).*

*Most IC manufacturers have provided SPICE model downloads, from their websites, for a subset of their catalog for some time now, however, we've encountered difficulties getting these to work on many occasions.*

*Some are encrypted while others only work with specific SPICE software. Many turn out to be quite crude and don't simulate the IC's behaviour very accurately.*

*Larger online retailers such as Digi-Key, element14 and Mouser now provide download links to SPICE models for their products, if available.*

*If you're serious about simulating prototypes, for these reasons and more, you will often find that you have to build your own models. That's why we've concentrated on this aspect of SPICE in the last couple of tutorials.*

*With the requisite knowledge, you can take a generic device (eg, an op amp) and adjust its parameters according to the device's data sheet, to at least approximate its behaviour.*

*For the simpler ICs, you can build your own models from scratch.*

### LED lamp life falls short of expectations

Your article entitled "LED Downlights and Dimmers" in the July 2017 issue (www.siliconchip.com.au/Article/10712) was informative and useful. However, it could have been more so if the life of LED lamps and luminaires had been canvassed.

There was one brief mention of this in the caption under an image of two downlights on page 28, where it was stated that their rated life is 25,000 hours. It is my understanding that this life is really the elapsed operating time when the light output will have fallen to 0.7 of the value when new, and not the actual time to failure.

This matter is raised because of problems being experienced with LED ceiling luminaires installed in the stairwells of the unit block where I reside. A figure of 35,000 hours is claimed for these lights on the packaging and data sheets, but they have been failing after approximately 10,000 hours.

That wouldn't be a problem if the luminaires contained LED globes that could be replaced by lay persons but instead there is a non-replaceable LED array and a switchmode power supply. The result is that we have to discard the complete luminaire and the lighting supplier happily sells us a replacement; not to mention that the changeover must be done by a qualified electrician.

I have been advised unofficially that our luminaires are not suitable for continuous operation all night, an

# Reinventing Pipelined A/D Converters

## Learn How These Two Work Together to Lower Complexity, Power, Cost and Size

Microchip Technology continues to expand its presence in the market of high-performance and high-speed Analog-to-Digital Converters (ADCs) while leaping past existing solutions with industry-leading integration of digital processing functions. These new ADCs are ideal for many communication systems, industrial and other applications. It was only natural the company that mastered microcontrollers would bring you a small ADC with massive abilities.

- Low-power operation
- Decimation filters
- Digital down-converter
- Easy-to-use evaluation tool available

**Contact Information**
Microchip Technology Australia
Email: aust_nz.inquiry@microchip.com
Phone: +61 (2) 9868-6733

**www.microchip.com/ADC**

microchip DIRECT
www.microchipdirect.com

MICROCHIP

The Microchip name and logo and the Microchip logo are registered trademarks of Microchip Technology Incorporated in the U.S.A. and other countries. All other trademarks are the property of their registered owners. © 2017 Microchip Technology Inc. All rights reserved.

# Mailbag: continued

### More on measuring lamp brightness

I previously wrote a letter to SILICON CHIP on measuring the brightness of LED lamps, which was printed in the Mailbag section of the July 2017 issue (pages 12 & 14; www.siliconchip.com.au/Article/10701).

After that, I decided to get a real lux meter from eBay which only cost $14.79, since it would be difficult to build anything for less than that. This is what I purchased: www.ebay.com/itm/162361509733

With the operating instructions, there is a table of suggested readings but it does not tell you the distance from the lamp. As one might know, as you double the distance from light source, the lux reading falls to one quarter.

An article comparing different lamps and their efficiencies might make a good follow-up to your article on LED Downlights and Dimmers from the July issue (www.siliconchip.com.au/Article/10712).

By keeping the meter in the same place (just over 150cm from the light source and not directly in-line) I got the following readings:

13W LED: 80 lux
140W incandescent: 240 lux
23W CFL: 16 lux at switch-on, creeping up to 53 lux

**Eric Richards,**
**Auckland, New Zealand.**

average time of 12 hours over a year, but this is not stated on the packaging or data sheet.

Standards bodies and the lighting industry must get this matter sorted out. Preferably, manufacturers should be required to produce luminaires that endure up to 0.7 initial output.

If not, they should be required to include more information on packaging and data sheets to make purchasers aware of any limitations. Perhaps SILICON CHIP might consider these issues in a future article.

**Russell Howson,**
**Bronte, NSW.**

*Editor's note: consider that even if the 35,000-hour figure is the mean time between failures (MTBF) for that lamp, that doesn't mean you won't get failures after a shorter period.*

*After all, it's an average figure; it could mean that half the lamps are expected to fail after 10,000 hours while the other half continue on for 60,000 hours.*

*We too have noticed trend towards LED light fittings with lamps that can't be replaced by the user and it seems unfortunate. Possibly, the reason they don't want you using the lamps twelve hours a day is because that way, you will quickly figure out that they don't last very long!*

*We would recommend using standard bayonet fittings with LED bulbs in that sort of situation. They're available in a range of brightnesses, are still very efficient and residents and/or cleaners could then easily (and cheaply) replace any that fail. Economies of scale are on your side if you use standard bulbs.*

### Spring Reverb DC power supply error

I just built up one of your new Spring Reverb controllers (April 2017; www.siliconchip.com.au/Article/10610) and noticed an error with the power supply.

The diode used in the DC version doesn't connect to the barrel jack because it's on the opposite AC leg of the bridge. This means that the DC barrel jack is unusable unless the diode bridge is fitted.

The diode can easily be moved to use the other AC bridge leg, and the jack will work, but in this instance the positive supply should be fed into pin 3 of CON5 instead of pin 1.

The component overlay picture for the DC supply can't use the barrel jack, but will otherwise work.

A simple solution would be to just fit the bridge rectifier in either circumstance, ignoring the diode.

**Thomas Skevington,**
**Perth, WA.**

*Comment: you are right, we connected the anode of the diode to the AC input that isn't connected to the barrel jack and fitting BR1 for a DC supply would solve this.*

*Alternatively, solder a link between pins 1 and 3 of CON5 (being careful not to short to pin 2) or fit a 3-way terminal block for CON5 and place a wire link between pins 1 and 3.*

*Notes & Errata for this were published in the June 2017 issue.*

### Worried about "Internet of Things" being hacked

For a long time, I have thought that using the internet for controlling power stations, keeping records of all kinds, carrying out banking and other financial transactions and in so many other places and ways is not only wrong but downright stupid. In fact, every time things go wrong, my first thought is: why are people so surprised?

I have read and listened to my friends all telling me how the future is the morphing or merging of devices. I was told that separate computers, phones, television sets would all become one device.

The list then got longer by adding the refrigerator, the washing machine, the toaster, the vacuum cleaner and more and in the new order, they would all become one.

And generally, the common element was being connected to the internet. The internet is the public toilet of communications; you might hear something you would not hear anywhere else but it is, just like a public urinal, dirty.

As an example, the thousands of switches (generally at the 11kV level) located in the substations, for most of the life of the grid, were controlled by dedicated phone lines or dedicated microwave links. Almost all these controls, worldwide, are now via devices using the internet.

This makes it a bit cheaper and yet it would only take one very bad hack to cause damage that would exceed by many times the savings of using the internet as opposed to the old way of controlling these switches.

Anyone who resists internetisation in all sorts of situations no doubt would find their career severely cut short for not being forward-thinking. In fact, no one seems to question the

au.mouser.com

The Newest Products for Your Newest Designs®

FORTE | THE INTELLIGENT BOM TOOL

# Master your Bill of Materials
## with greater intelligence

- Time-saving, one-step BOM importer (maintains original format)
- Access millions of orderable parts
- Add/delete parts, see multiple quantities and prices
- Part match confidence and design risk indicators

Learn how ***FORTE*** is more than just matching and ordering parts.
Discover why it's what a BOM tool should be at **au.mouser.com/bomtool**.

MOUSER ELECTRONICS.

australia@mouser.com

Distributing semiconductors and electronic components for design engineers.

Mouser and Mouser Electronics are registered trademarks of Mouser Electronics, Inc. Other products, logos, and company names mentioned herein, may be trademarks of their respective owners.

OCEAN CONTROLS
Helping to put you in Control

**Pressure/Temperature Transducer**
This Transmitter is a 4 wire device for both Pressure and Temperature It features 0 to 10.0 Bar range, 4 to 20 mA outputs.
**SKU: FSS-1548**
**Price: $239.00 ea + GST**

**4-20mA Current Transducer**
The KTA-366 is a current calibrator designed to make testing and measuring 4-20mA loops simple, it is suitable for testing 2 and 3 wire transducers.
**SKU: KTA-366**
**Price: $145.00 ea + GST**

**U6 Data Acquisition Module**
USB Multifunction DAQ device with 14 analog inputs (up to 16 bit resolution), 2 analog outputs and 20 digital IO. 2 Counters and 4 timers.
**SKU: LAJ-041**
**Price: $475.00 ea + GST**

**S Type Load Cell 0-500Kg**
The LS series have excellent accuracy and stability. Manufactured from Aluminum alloy steel, it has an output signal of 20mv/v +/- 0.25%.
**SKU: DBS-2517**
**Price: $129.00 ea + GST**

**Programmable Stepper Pulser**
This stepper pulser provides signals to control speed, acceleration and direction for a stepper driver. Can be used in unidirectional and bidirectional applications
**SKU: KTA-301A**
**Price: $89.95 ea + GST**

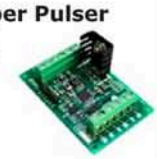

**Digital Stepper Driver**
Features electrical damping, anti-resonance, start-up smoothing, multi-stepping and sensorless stall detection. 20 to 80 VDC powered with output current up to 8.2 A peak.
**SKU: SMC-033**
**Price: $179.00 ea + GST**

**Large Temperature Display**
Large Temperature Indicator with range -19.9 to 99.0degC. Can be used in sauna, fitness centre, hospital and greenhouses
**SKU: HNI-080**
**Price: $269.00 ea + GST**

**For Wholesale prices**
**Contact Ocean Controls**
**Ph: (03) 9782 5882**
**oceancontrols.com.au**
Prices are subjected to change without notice.

# Mailbag: continued

wisdom of using the internet in these situations.

A modern army is controlled by emails. Naturally, all sorts of encryption is used and frequently, the communication pathways are not the public internet.

Yet a lot of the equipment shares many elements that are functionally ubiquitous with the rest of the community and the internet itself is sometimes used.

My notebook was purchased from a shop that had won a contract to supply 2000 notebooks to somewhere in defence. The shop bought 300 more all at a good price and I bought one. How could anyone be sure there was no phone-home hardware or software capabilities in such a device?

One of the largest entities to be attacked on May 12th, 2017 was the NHS in the UK. I have read that 90% of the British National Health Service still uses Windows XP and that the "problem" was that these "old" systems have vulnerabilities. What a lot of rubbish. The problem was using Windows in the first place.

The great strength of Microsoft is its open nature. Anyone can write add-on software and therefore so can a hacker.

Maybe not all but many of the so-called vulnerabilities of all the versions of Windows in my mind are not mistakes but rather deliberate portholes put in the operating system that can be used by security services when required.

Unfortunately, all systems leak and knowledge of these portholes got out and known to people who exploit them for no good. The so-called patches really are patches to close over these openings.

Bank and hospital records, power stations and grids, water supplies and all infrastructure and all the other really important things in our life should not use the internet and equipment using Microsoft or Apple or the like. The internet has its place but like the public toilet it is impossible to make it suitable for managing the key elements in our life.

The first thing that needs to change is the mindset that suggests that using the internet and something like Windows is modern and clever and that doing things this way is progress.

They might be good for keeping my grandchildren amused but they are inappropriate to open and close the 11kV switches at my local substation. There are no fundamental problems; all that needs to change is the group-think that suggests this is progress.

**Ken Moxham,**
**Urrbrae, SA.**

*Editor's note: we have commented about the lax security of "Internet of Things" devices (including cars and pacemakers!) in past issues.*

*But we do not think that securing devices accessible over the internet is impossible; merely that most companies selling internet-connected products have insufficient incentive to take security seriously.*

### Redesigned LED traffic lights could save money and space

As in most cases no two lights in a given set of three are on at the same time, traffic management signals could be incorporated within a single display.

Two-thirds of the individual lights now used would become redundant. Millions of dollars in savings are there for the taking. A single display needs to only change its colour.

The colour-blind could still read the signal if each colour also had a unit shape. For example, stop could be a red square, go a green circle and prepare to stop an amber star. Direction arrows etc could have their coloured arrow symbol in a separate display.

At present, in Queensland, typical intersections can have some forty to seventy separate displays and this makes for a somewhat ugly road-scape. Am I dreaming, or is it technically complicated? Could a small colour monitor be used?

**H. Wrangell,**
**Elimbah, Qld.**

*Editor's response: it isn't technically difficult and in fact, if you go to China, you will see lights similar to what you have described.*

*They are animated LED arrays and even count down how long you have left before the light changes (red to green,*

Master Instruments

# Your Industry. Our Expertise.

In every sector from government agencies to marine and aviation departments, Master Instruments' ability to design and engineer specific battery systems to suit unique power requirements is what makes us Australia's Battery Experts.

Australian owned and operated for over 75 years, we have built global partnerships in the portable power industry. As such, we source quality components that our qualified technicians use in each custom built industrial pack up to ISO quality standards.

With mass production capabilities in Taiwan, we cater to all volumes, great and small. Each battery goes through stringent testing and certification to meet Australian electrical and safety standards. Examples below:

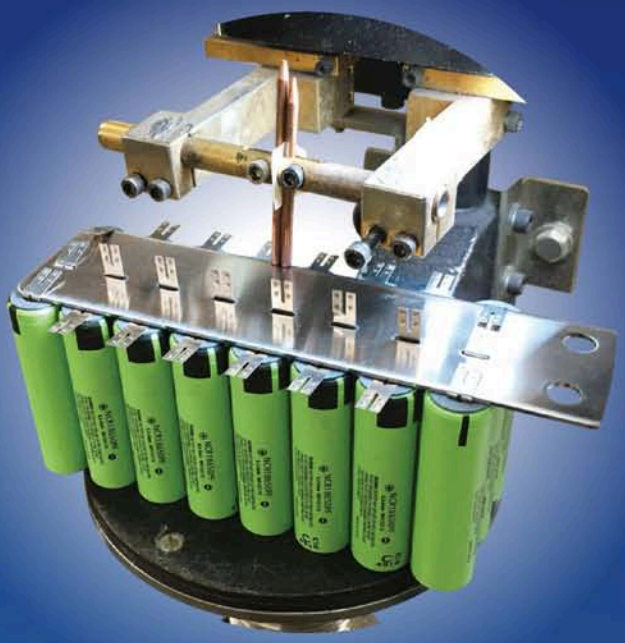

High capacity Lithium Ion battery pack suits a range of applications including eBikes. Key lockable and mountable, features LED power status indicators and built in circuit protection.

Batteries for surveillance and CCTV camera units. Whether it's for your home or a fleet protecting your business, the batteries that power them need to be reliable.

Lithium Iron Phosphate (LFP) batteries have several advantages over traditional SLA:

- High energy output
- Deep cycle up to 2000 times
- 1/3 weight of equiv. SLA

Use in motorised golf carts to experience the difference.

As with any industry, a cleaning business needs to be fast and efficient and so does their equipment.

Cordless vacuum batteries are also stocked at MI.

With the impending NBN network rollout across Australia, did you know that Drypower model 12SB7.2P-F2 is an ideal alternative battery for the NBN power supply? Check our website for details.

Mobility scooters obviously need reliable power or else an unsuspecting user might end up stranded in aisle 3. The Drypower range of AGM & GEL batteries are our brand of choice.

Master Instruments

**Master Instruments Pty Ltd**

Sydney: (02) 9519 1200 Melbourne: (03) 9872 6422
Perth: (08) 9302 5444 Brisbane: (07) 5546 1676

WEB: www.master-instruments.com.au EMAIL: sales@master-instruments.com.au

Like us on Facebook
G+
Certified System Quality ISO 9001 SAI GLOBAL

**Bill being introduced to federal parliament in attempt to restore ABC shortwave services**

On the 31st of January 2017, the ABC switched off all high frequency (shortwave) broadcasts. This included ABC Territory Radio covering all of NT and beyond as well as Radio Australia to the Pacific and Papua New Guinea.

This has left many in the outback with no Australian radio at all, particularly when in vehicles or boats. Senator Xenophon has introduced a bill which is designed to force the ABC to restore high frequency broadcasts.

The ABC have had two Digital Radio Mondiale-capable transmitters which have never broadcasted in this mode. They enable FM stereo sound quality over huge areas with the ability to transmit image and multi-page text along, with an Emergency Warning System (see www.drm.org for more details).

For more information about the proposed bill, see: http://siliconchip.com.au/l/aaen ("Australian Broadcasting Corporation Amendment (Restoring Shortwave Radio) Bill 2017").

**Alan Hughes,**
**Hamersley, WA.**

*Editor's Note: see the article about DRM on page 61 of this issue.*

pakronics
Learn, Make and Invent
Australia's own DIY Electronics store
Modular system for all Open Source Hardware

Raspberry Pi

Arduino Uno

IoT Wio Link

Beaglebone

Genuino 101

Grove
The modular, standardized connector prototyping system

inquiry@pakronics.com.au
+61 469 605 695
@pakronicsaustralia
@pakronics

Shop at: https://www.pakronics.com.au/grove

*green to red etc). Even some pedestrian crossings in Australia have count-downs.*

**Internet of Things hazards and serial error checking**

I agree with most of what was stated in the Publisher's Letter of November 2016. Australia has a number of positives for running a business. It is just a pity that some government polices are so hostile to business. Of course, in the end, we, the people, lose.

The November 2016 issue also had a good collection of letters and articles. One article, on the Internet of Things ("IoT") by Ross Tester, deserves some comment. Aside from being a nicely written article, its subject does worry me.

It seems to be another case of having technology and looking for a way to use it. Just to justify my dislike, my friend sent me an email concerning the hacking of Philips Hue smart light bulbs which are controlled using ZigBee wireless.

Some researchers decided to test the system security and created a Zigbee worm which they proved was able to spread within minutes.

However, the problem was corrected by Philips before the paper was released. Even so, it is a wake-up call. I do not have a link to the research paper but its title is: "IoT Goes Nuclear: Creating a ZigBee Chain Reaction" and the authors are; Ronen, O'Flynn, Shamir, and Weingarten.

Just imagine the problems that could be caused with the use of IoT in healthcare. Already one vendor has had to patch their pacemakers because hackers could potentially break in and control the patient's heart rate!

In the mailbag section of the October 2016 edition of SILICON CHIP, a reader mentioned the LIN standard ("Using CANBUS for home automation"). He just mentioned CAN and LIN which are both used in cars.

Except for car technicians, I am probably one of only a handful of people who would have recognised it. It is effectively a low speed, low-cost system for non-critical communication in cars.

It reminded me of one of the problems of networked micros. The problem is the synchronisation of the transmitter of the sender unit with the receiver of the destination unit. A few years ago, I designed a machine with a master controller and nine slave controllers linked with an RS-485 bus.

The longest cable was only a few metres and there was very little electrical noise. Yet, faulty packet errors were occurring at about one in a thousand. With just two devices talking to each other, there were no errors for hundreds of thousands of packets but with three or more devices, there were errors.

The solution came from a feature of the LIN standard. Every LIN standard packet starts with a break character. It is a purposely designed faulty character which is longer than normal. When the destination unit receives this character, a frame error is generated which is ignored. However, the receiver is reset and is now ready for the start bit of the next character to be sent.

If anyone is considering networking micros using RS-485, implement packet communication and incorporate the LIN

PCBCART

# Exceptional, Cost-effective Full Turnkey PCB Service from China's most experienced provider

With 10+ years' experience serving tens of thousands of international clients, our expanded custom PCB manufacturing, assembly and parts sourcing capabilities allow us to fulfill almost all kinds of PCB needs at reasonable price.

We insist each electronic project (including those still at prototyping stage) deserves superior quality PCB services, that's why we follow the strictest quality standards during production. Got a project ready to bring into reality? We're happy to discuss.

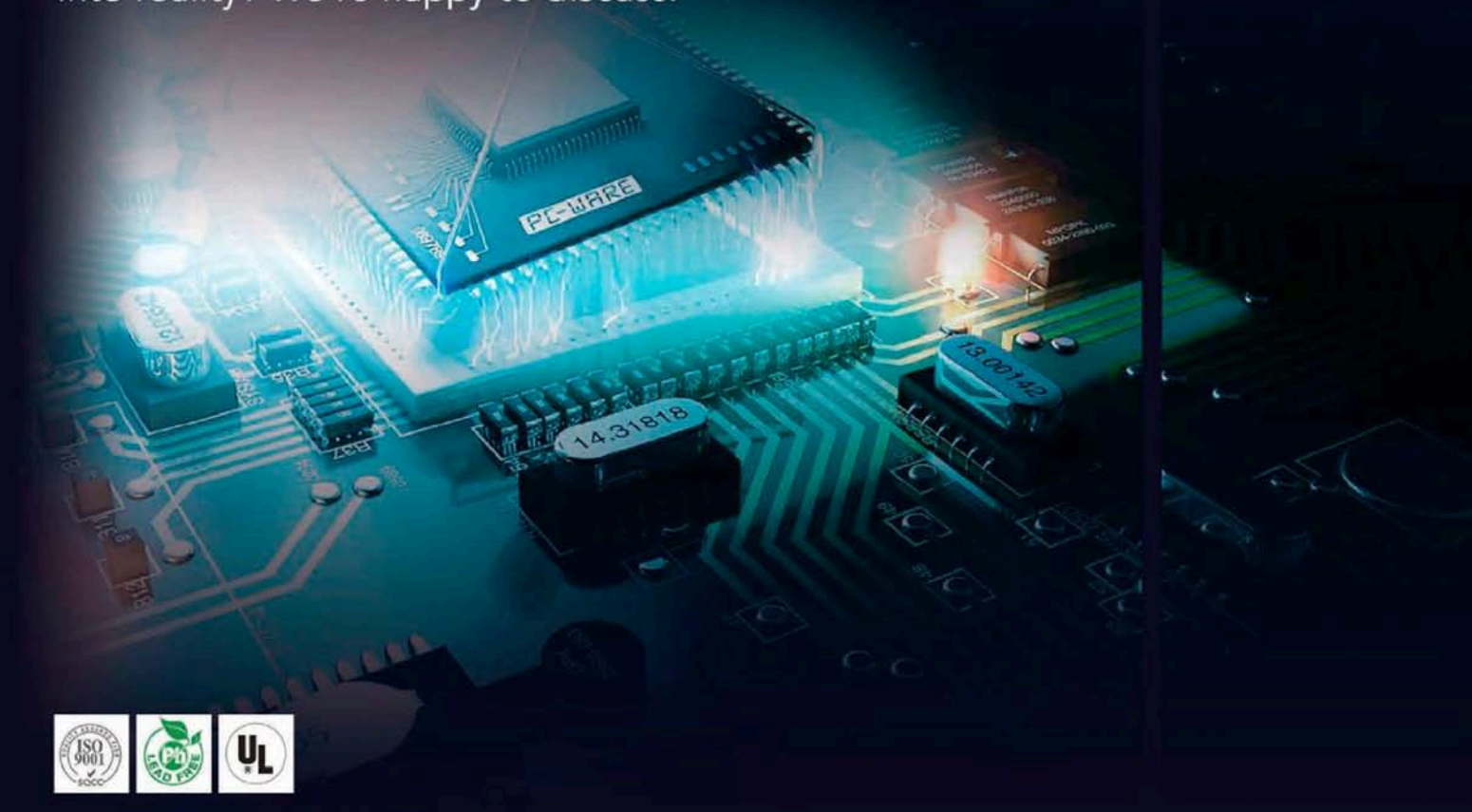


ISO 9001 FQCC · Pb LEAD FREE · UL

WWW.PCBCART.COM

sales@pcbcart.com

# Mailbag: continued

### July 2017 issue comments

I would like to make some comments about the July 2017 SILICON CHIP magazine issue.

**1)** The review of the Tecsun S-8800 reads more like an advertising blurb rather than a review. I had to check who the author was. Looking at the specs quoted on page 58, I can see why it is an AM set. With a quoted 5dB signal/noise ratio for FM, I can't see anyone wanting to listen to it!

Also, the specification sheet says output power with 10% distortion is "> 450mW" yet in the text, it refers to 2W of output power. That must be a square wave with 100% distortion!

There is no specification given for the three different bandwidths mentioned in the text, which are presumably set by the "AM BW" knob – are these IF filters?

There is mention of DSP in the text but not what it does. Is it just used as a fancy audio low pass filter to give the 3 AM bandwidths or is it used to do IF filtering & demodulation? The review is mute on this point.

**2)** In the drawing of the Geeetech VS1053 shield on page 74 it looks like the green LED is connected to the wrong line (SCK) whereas the text says it connects to the CS line.

**3)** Now after the brickbats, a plaudit! I thoroughly enjoyed the Vintage Radio article on the DKE38 radio. It was very much appreciated that the reason/function of each component was covered in detail, so I learned something too.

However, there also seems to be an error in the text or drawing. The text on page 94 says "The amplified signal is developed across the 2MΩ resistor R3...". But looking at the drawing on page 93, the pin 1 anode load is marked R2 and is 200kΩ. While R3, which is marked 2MΩ, is a feedback resistor.

**4)** Enjoyed the article on LEDs and dimmers which explained the issues very well. Excellent, thank you.

**David Williams,**
**Hornsby, NSW.**

*Editor's note: a pure square wave has a harmonic distortion of 48.3% but we take your point. Power specifications at distortion levels above 10% are not very useful since increasing the volume beyond may not make the sound any clearer.*

*The VS1053 shield circuit diagram is correct but the text is wrong.*

*You are correct about the discrepancy between the text and circuit diagram.*

break character. I use PIC chips and the later UARTs contain a bit, SENDB, in the UART transmit status and control register which is used to initiate the break character.

With regards to the packet format, there are a large number in use with RS-485, including IP, UTP, FTP, HTTP, CAN, USB, LIN etc but they all generally follow the format of leading dummy bytes, destination address, sender's address, number of data bytes, data, checksum or CRC, and a termination byte or bytes. A good packet system with error checking can prevent a lot of headaches.

**George Ramsay,**
**Holland Park, Qld.**

### What about a digital graphic equaliser?

I noticed upon reading about the new 10-band Graphic Equaliser by John Clarke in the June and July 2017 issues (**www.siliconchip.com.au/Series/313**) that it uses analog "set and forget" sliders. Have you considered designing a digitally controlled graphic equaliser like the AKAI EA-A7 from the 1980s? Here is a YouTube video about it: **https://youtu.be/efvunFs4XkA**

Maybe John Clarke can reverse engineer the AKAI EA-A7 and then duplicate his design in a digital form, or at least add an LCD screen? Note that in the video by Techmoan, the graphic equaliser is used to help compensate for unilateral hearing loss. The AKAI EA-A7 has digital presets for both sides of the stereophonic sound.

Many of your digital controlled projects use full colour LCD touchscreens. Note the abundance of available features in the Akai EA-A7 graphic equaliser Yes, it only has seven bands but it's the way it is controlled. Note the independent left and right control pre-sets. Note the audio bypass circuit when the Akai EA-A7 Graphic equaliser is off, so other stereo equipment can keep functioning.

**John Crowhurst,**
**Adelaide, SA.**

*Editor's response: funny you should bring this up as we are publishing the first article on our new 2/3-way Active Crossover in this issue and we had quite an internal debate over whether to use digital control or not in that project.*

*The problem came down to this: digital control had numerous benefits such as the ability to adjust the crossover frequencies for both channels simultaneously using a single knob, however, to get the same level of performance as an analog project, it would make it a lot more expensive to build.*

*That's because you would need to use many high quality digital pots to give low noise and distortion, which are quite expensive, plus a micro to control them all, possibly a touchscreen and the low operating voltage of low distortion digital pots would also complicate the surrounding circuitry.*

*Or it could be done using digital signal processing (DSP) but then to avoid compromising sound quality you would need a very high quality CODEC which is also expensive, plus a fairly serious processor and complex software to drive it. In the end, the old-fashioned approach using ganged pots and op amps seemed better overall.*

*We do appreciate digitally controlled equipment but it can be so much more complex to design and build. That, in combination with the higher cost of parts would mean that in all likelihood, fewer people would build the design, even if the digital version had more features.*

*So that's why we have tended to stick with analog designs for the moment. But we wouldn't rule out doing as you suggest and designing a digitally controlled or DSP equaliser/crossover/etc in future.*

# KCS TraceME - LoRa™ - Sigfox

# KCS LoRa - Sigfox technology

## Protect - Follow - Control
## Measure - Track - Trace
## Everything
## Everywhere

We make OEM versions for: Drones - Pumps - Machines - Rentals - Vehicles - Smart Cities - Security - Transportation - Lightning - Agriculture - Tools - Waste Management - Industrial IoT - Water meters - Electricity - etc.

All trademarks mentioned herein belong to their respective owners.

www.trace.me

ICOM

Wideband Communication Receiver

Multiple Digital Mode Decode

ICOM5012

Introducing Icom's newest wideband receiver, the IC-R8600. Capable of receiving between 10kHz and 3GHz, the IC-R8600 will decode diverse digital communication signals and the advanced FPGA processing technologies will ensure clarity and accuracy.

The fast moving, real-time spectrum scope and waterfall function on the large TFT screen allows the user to search for unknown signals whilst scanning the bands.

To find out more about Icom's products email sales@icom.net.au

WWW.ICOM.NET.AU

## Mailbag: continued

### Radio History under the hammer

Well-known radio collector and restorer Lou Albert is putting his vast collection up for auction over the weekend of September 30 and October 1st.

Lou has one of the largest and most diverse collections of vintage radios in the country. It covers everything from Marconi to the mid-sixties. Myriad parts, literature, and ephemera will be on sale in a parallel market set up at the same venue. In total, there will be thousands of pieces on offer.

Some of the items set for auction hark back to the dawn of wireless experimenting in Australia. There is an original and primitive coherer receiver, which Lou believes to have been part of the 1903-4 experiments at St Stanislaus College in Bathurst, when Father Joseph Slattery transmitted Morse signals over a distance of three miles.

There are other items with indisputable provenance. Father Shaw's famous Maritime Wireless Company, established during 1911 in Randwick, Sydney, is represented by a superb double detector crystal receiver. It is a faithful replication of the Marconi Flexible Crystal Receiver (Type 16) and is clearly engraved with the legend "Royal Australian Navy, Randwick". It dates to the First World War.

Beyond these are other extremely rare Marconi sets for both detection and amplification (the latter rather engagingly known as "Note Magnifiers").

Most of the big names in early manufacture and retail are represented. Harrington's and Levensons', Wiles Wonderful Wireless, Astor, Udisco, Colmovox, Healing, Stromberg Carlson, Kriesler, Tasma, Airzone – the list is comprehensive, and of course includes AWA.

The collection includes Bakelite and timber cathedral radios, magnificent consoles, some of the most sought after of rare and coloured Bakelites of the Art Deco era, early transistor radios, as well as horn speakers, rare early loop antennas, and some of the best early TRF sets you'll ever see.

Plus there are early gramophones, telephones and an absolute plethora of parts and accessories: headphones and Morse keys, early valves and components, microphones, early crystal sets, literature; the list is almost endless.

The auction will be held in the Guides Hall, 6 Lamington Drive, Warners Bay, NSW (near Newcastle). Open for inspection 8.00am both days, with the auction starting at 10.30am Saturday and 9.30am Sunday.

Further information is available on the HRSA website at www.hrsa.asn.au

**Richard Begbie,**
**via email.** SC

freetronics
www.freetronics.com.au

**Love electronics? We sure do! Share the joy: give someone an Experimenters Kit for Arduino:**

**Includes:**

- 48-page printed project guide
- Arduino compatible board / USB cable
- Solderless breadboard
- Sound & Piezo module
- Light sensor module
- Micro servo motor
- Red, green, and RGB LEDs
- Resistors, transistors, and diodes
- Buttons and potentiometer
- ... and more!

**Use discount code "SC17C" for 20% off until October 2017!**

**Support the Aussie electronics industry. Buy local at www.freetronics.com.au**

**Many more boards available for Arduino, Raspberry Pi, and ESP8266 projects: motor controllers, displays, sensors, Experimenters Kits, addressable LEDs, addressable FETs**

**Arduino based USB Full Colour Cube Kit - visualise, customise and enjoy on your desk!**

**Australian designed, supported and sold**

**As we go to press, the 20-year-long mission of the Cassini-Huygens space probe is reaching its spectacular climax. Cassini is entering some of the last of its 22 weekly "dives" *between* Saturn and its rings, sending back to Earth new and unique scientific data. At the end of the final orbit, scheduled for 10:44am UTC on September 15th, Cassini will be intentionally steered into Saturn's gas clouds, almost certainly burning up in a dramatic last hurrah. It is being destroyed for two main reasons: it's running very low on fuel and NASA wants to ensure it cannot collide with (and possibly pollute) any of Saturn's moons, thus affecting future exploration.**

**Here we look at the remarkably successful Cassini-Huygens mission and what it has meant to scientists back on Earth.**

**by ROSS TESTER**

# CASSI GRAND

# NI'S FINALE

The name *"Cassini Grand Finale"* was chosen from a public competition, reflecting its exciting journey to date, while acknowledging that it's a big finish for what has been a truly great show. In fact, NASA invited applications from the public to join it at the Jet Propulsion Laboratory in Pasadena, California, for a Grand Finale party on September 15 (sorry, you're too late to apply!).

In a 3.2 billion dollar collaboration between NASA, the European Space Agency and Agenzia Spaziale Italiano – the Italian Space Agency. Cassini was launched on October 14th 1997 and entered into orbit around Saturn on 30th June 2014.

The two spacecraft are named after astronomers Giovanni Cassini and Christiaan Huygens.

Cassini/Huygens had several specific mission objectives:

- *Determine the three-dimensional structure and dynamic behavior of the rings of Saturn.*
- *Determine the composition of the satellite surfaces and the geological history of each object.*
- *Determine the nature and origin of the dark material on Iapetus's leading hemisphere.*
- *Measure the three-dimensional structure and dynamic behavior of the magnetosphere.*
- *Study the dynamic behavior of Saturn's atmosphere at cloud level.*
- *Study the time variability of Titan's clouds and hazes.*
- *Characterise Titan's surface on a regional scale.*

These objectives have not only been met – they've been massively over-achieved.

It's not the first time Saturn has been visited by a spacecraft from Earth. Pioneer 11 was the first, launched by NASA on April 6, 1973 to study the asteroid belt, the environment around Jupiter and Saturn, solar wind, cosmic rays, and eventually the far reaches of the Solar System and heliosphere. Last contact with the spacecraft was on September 30, 1995.

Then in the early 1980s, NASA's twin Voyager spacecraft had flown by and photographed Saturn and its largest moons but these were brief encounters and with mid-20th-century technology.

Cassini was a whole new ball game, with 21st century technology, a mission measured in years, rather than hours and a huge array of instrumentation and data-gathering equipment on board. And while Voyager was able to send photographs back to Earth, Cassini (and Huygens) photography was in glorious, detailed, high-definition. And colour!

The launch and mission was previewed in SILICON CHIP September 1997, *"The Cassini Space Probe: unravelling Saturn's Secrets"* www.siliconchip.com.au/Article/4835

The launch vehicle was a Titan IV rocket, which propelled the

*Artist's impression courtesy NASA*

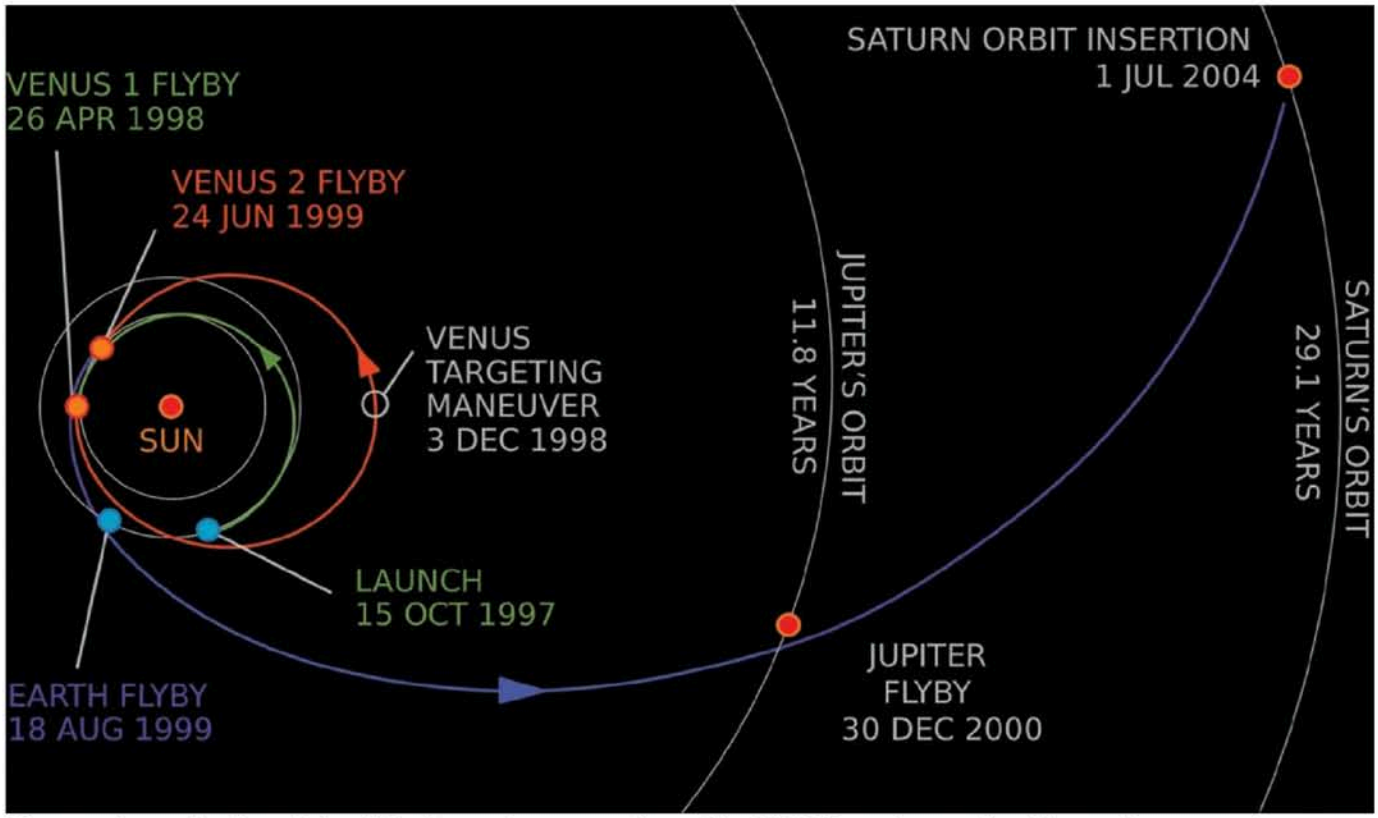


**It's not quite as simple as "aim, light the touch paper and stand back" (OK, you have to be old enough to remember skyrockets!). Cassini-Huygens travelled in an ever-increasing elliptical path using the gravity of Venus (twice), Earth and Jupiter to increase its speed and place it on a trajectory to intersect with Saturn, almost 93 months after its launch.** ***(Courtesy NASA/JPL)***

5.5 tonne probe into an Earth orbit in preparation for its journey to Saturn. Of the rocket's 940,000kg launch weight, 840,000kg was fuel.

Along the way, in January 2005 it successfully dropped a probe named Huygens (hence the mission name, Cassini-Huygens) onto Saturn's largest (and best known) moon, Titan.

The Huygens craft was developed by the European Space Agency and "hitched" a ride on the side of Cassini.

We covered this section of the mission in an article in May 2005: "Knocking on Titan's Door"(**www.siliconchip.com.au/Article/3056**).

Titan is huge: at 5150km in diameter, it's about half the size of the Earth. Then again, Saturn itself dwarfs the blue planet – at 120km in diameter, you could fit 764 Earths inside Saturn!

Even at its closest, Saturn is 1.2 billion (yes, B for billion!) kilometres from Earth. To put that in perspective, the Sun is only 150 million kilometres away.

But it wasn't a straight A-to-B flight. Ignoring the fact that Saturn wouldn't be in anywhere near the same position after more than a decade, the Cassini-Huygens spacecraft made close fly-bys of Venus (twice), Earth and Jupiter, using their gravity to "slingshot" the craft on its journey.

In fact, Cassini orbited the Sun twice before setting out on the long path to Saturn.

Without these gravity-assisted fly-bys, which used energy from the planets to increase Cassini's velocity and change its direction relative to the Sun, there is simply no way that it could have carried enough fuel to make it to Saturn, let alone travel more than 2 billion kilometres around the planet once it arrived.

Some anti-nuclear protestors on Earth claimed that having the radioactive-powered craft flying so close to Earth posed an unacceptable risk. NASA countered by showing that the closest Cassini would approach the Earth was more than one thousand kilometres. The also claimed that the chances of a collision were "less than one in a million".

## So what's it been doing?

In a word, exploring! In many more words, conducting an amazing array of scientific and astronomic research not only on Saturn itself (even though it has never landed, and never will) but also on its many moons (many more than previously thought) and, of course, those rings which have fascinated man ever since he had the telescopes powerful enough to see them.

The 22 "dives" Cassini is taking in the weeks up to its demise have actually been in and through those rings and between the rings and Saturn's surface.

Its speed is nearly 122,000 kilometers per hour relative to Saturn's center and about 110,000 kilometers per hour relative to Saturn's cloud-tops. At that speed you could travel coast-to-coast in Australia in less than three minutes, and it would take just over an hour to travel three times around the Earth at the equator.

Scientists use the Doppler Shift in radio signals to measure its speed and the signal's timing to determine its distance.

The Cassini mission program was originally planned to end in 2008. That it has lasted another nine years is testament to the initial planning and design, the build quality and the "nursing" of the craft – and of course, it meant that

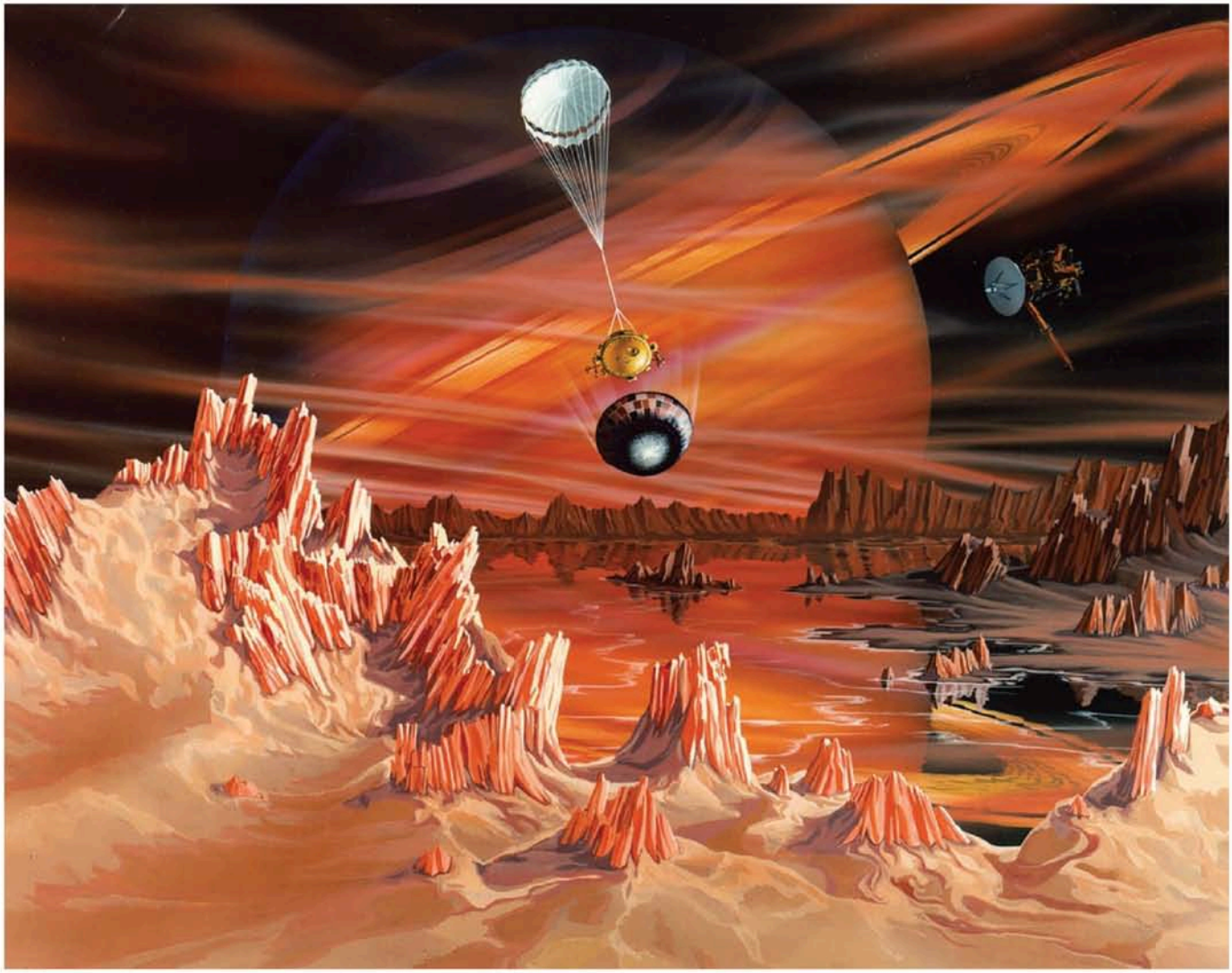

**A somewhat stylised artist's impression of Huygens parachuting to make a soft landing on Titan, which it did in January 2005. Titan was believed to be the only body (except for Earth) in the solar system with a liquid on its surface (a hydrocarbon, not water) but Cassini found clear evidence of water on another moon, Enceladus.** ***(Courtesy NASA/JPL)***

an enormous increase in the amount of experimentation and sampling could occur.

In April, Cassini started its dives through the gap between Saturn and its innnermost ring at nearly 122,000 kilometers per hour relative to Saturn's centre, and about 110,000 kilometers per hour, relative to Saturn's cloud-tops.

At that speed you could travel from New York City to Los Angeles in less than three minutes and it would take just over an hour to travel three times around the Earth at the equator.

## On the way: Saturn's moons

Even before Cassini started orbiting Saturn itself, it had undertaken valuable research on the many moons and rings surrounding the planet itself.

One of the defining features of Saturn is its number of moons. Excluding the trillions of tonnes of little rocks that make up its rings, as of September 2012, Saturn has 62 discovered moons.

Perhaps Cassini's most detailed look came after releasing the Huygens lander towards Titan, Saturn's largest moon. Huygens descended through the mysterious haze surrounding the moon and landed on January 14, 2005.

It beamed information back to Earth for nearly 2.5 hours during its descent, and then continued to relay what it was seeing from the surface for 1 hour, 12 minutes.

In that brief window of time, researchers saw pictures of a rock field and got information back about the moon's wind and gases on the atmosphere and the surface.

Cassini's (and Huygen's) discoveries and findings sent back to Earth revealed previously unknown data about their environments and appearances. Some of the achievements include:

- Completed first detailed reconnaissance of Saturn's family of moons and rings.
- Delivered the Huygens probe to Titan for the first landing on another planet's moon.
- Discovered erupting geysers and a global subsurface ocean on Enceladus (In 2015, Cassini did a series of flypasts of Enceladus to get more information about the gas and dust in the plumes).
- Found clear evidence of present-day hydrothermal activity on Enceladus – the first detection of hydrothermal activity beyond Earth.

Saturn's largest moon, Titan, passes in front of the planet and its rings in this true colour snapshot from NASA's Cassini spacecraft. This view looks toward the northern, sunlit side of the rings from just above the ring plane. It was taken on May 21, 2011, when Cassini was about 2.3 million kilometers from Titan. *Credit: NASA/JPL-Caltech/Space Science Institute*

## Cassini Mission Quick Facts

### Cassini Orbiter

**Dimensions:** 6.7m high; 4m wide
**Weight:** 5,712kg with fuel, Huygens probe, adapter etc; (unfueled orbiter alone 2,125kg)
**Orbiter science instruments:**
composite infrared spectrometer, imaging system, ultraviolet imaging spectrograph, visual and infrared mapping spectrometer, imaging radar, radio science, plasma spectrometer, cosmic dust analyzer, ion and neutral mass spectrometer, magnetometer, magnetospheric imaging instrument, radio and plasma wave science
**Power:** 885W (633W at end of mission) from radioisotope thermoelectric generators

### Huygens Probe

**Dimensions:** 2.7m in diameter
**Weight:** 320kg
**Probe science instruments:** aerosol collector pyrolyser, descent imager and spectral radiometer, Doppler wind experiment, gas chromatograph and mass spectrometer, atmospheric structure instrument, surface science package
**Huygens Probe Titan Release**: December 24, 2004
**Huygens Probe Titan Descent**: January 14, 2005
**Huygens' Entry Speed into Titan's Atmosphere**: about 20,000km/h

### Mission

**Launch vehicle:** Titan IVB/Centaur
**Weight:** One million kilograms
**Launch:** Oct. 15, 1997, from Cape Canaveral Air Force Station, Florida USA.
**Earth-Saturn distance at arrival:** 1.5 billion km (10 times Earth to Sun distance)
**Distance traveled to reach Saturn:** 3.5 billion km
**Saturn's average distance from Earth:** 1.43 billion km
**One-way Speed-of-Light Time from Saturn to Earth at Cassini Arrival:** 84 minutes
**One-way Speed-of-Light Time from Saturn to Earth During Orbital Tour:** 67 to 85 minutes
**Venus Fybys:** April 26, 1998 at 234km; June 24, 1999 at 600km
**Earth Flyby:** August 18, 1999 at 1,171km
**Jupiter flyby:** December 30, 2000 at 10 million km (closest approach 5:12am EST)
**Saturn Arrival Date:** July 1, 2004, UTC
**Primary Mission:** 4 years
**Two Extended Missions:** Equinox (2008-2010) and Solstice (2010-2017)
**Cost of Mission:** about $3.27 billion (U.S. contribution is $2.6 billion and European partners' contribution $660 million)

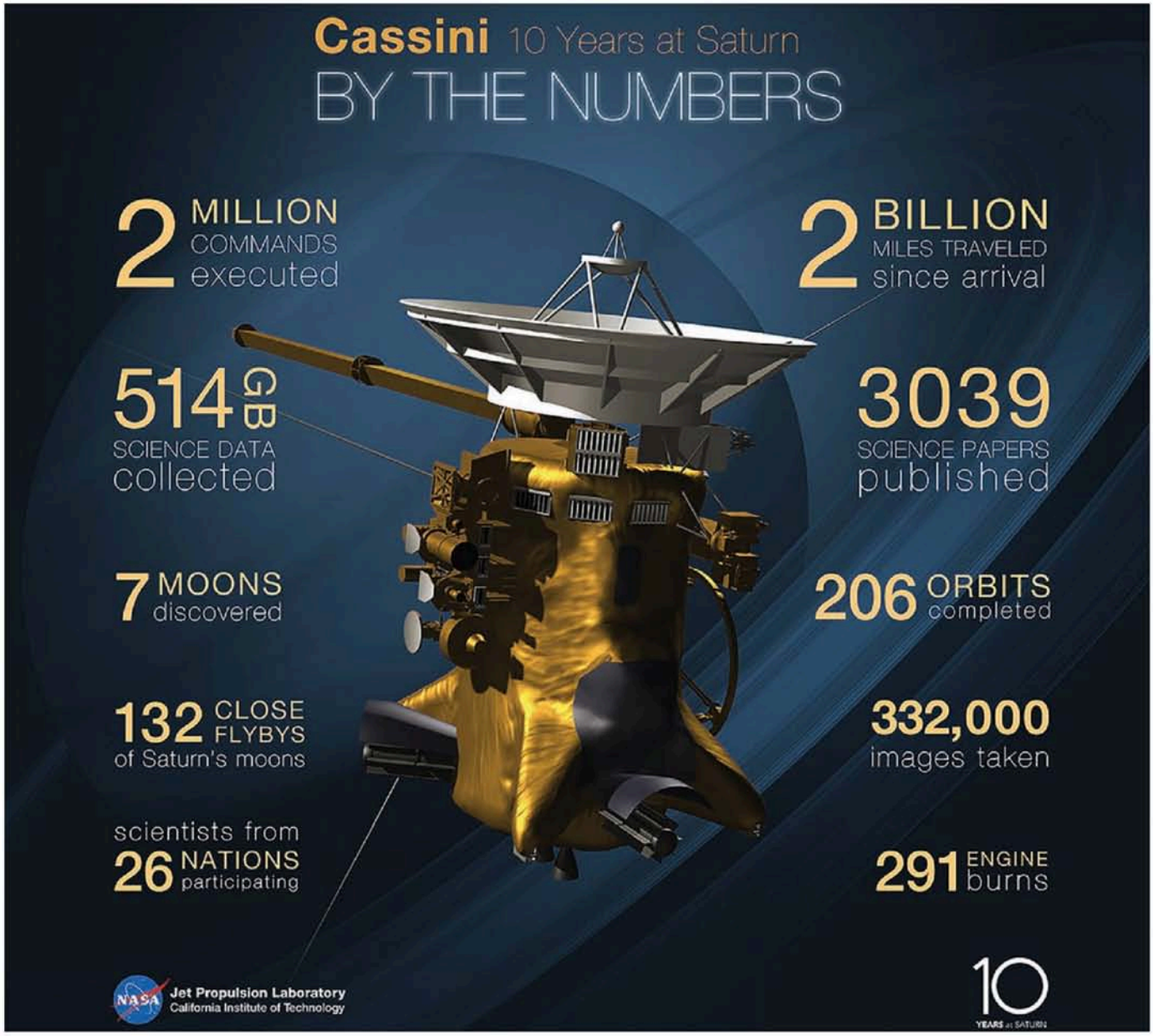


- Revealed Titan as a world with rain, rivers, lakes and seas.
- Revealed Saturn's rings as active and dynamic – a laboratory for how planets form.
- Discovered and then pinned down details about a giant methane lake on Titan.
- Discovered 80km-wide landslides on Iapetus.
- Took a close-up view of Rhea, revealing a pockmarked surface.
- Discovered a huge ring, 8 million miles away from Saturn, probably made up of debris from Phoebe.

## Cassini reaches Saturn

Cassini went into orbit around Saturn on July 1, 2004. On September 27, the spacecraft then moved on to the next, primary, stage of its mission, called the Cassini Equinox Mission. This phase allowed scientists to study seasons and other long-term weather phenomena on the ringed planet and its moons and to continue observations of the magnetic bubble around the planet, known as the magnetosphere.

Originally planned to end on July 30, 2008 the mission was extended to June 2010.

This studied the Saturn system in detail during the planet's equinox, which happened in August 2009.

The spacecraft's life was further extended in 2010, with the Cassini Solstice Mission, which concludes with Cassini making its final dive into Saturn's atmosphere on September 15 this year.

The extension enabled another 155 revolutions around the planet, 54 flypasts of Titan and 11 flypasts of Enceladus.

Earlier this year, an encounter with Titan changed its orbit in such a way that, at closest approach to Saturn, it will be only 3,000km above the planet's cloudtops, below the inner edge of the D ring. This sequence of "proximal orbits" will end when another encounter with Titan sends the probe into Saturn's atmosphere.

To say that scientists around the world have been enthusiastic about Cassini (and Huygens) is a massive understatement.

While it has been 20 years since launch, they will spend that long again analysing the data! SC

# Another Notable 2017 Space Anniversary:

**In this account** of the rather incredible (in the true sense of the word) achievements of Cassini and Huygens in September this year it would be remiss of us NOT to mark an even more incredible anniversary also occuring this year – that of the launch of the first man-made Earth satellite, Sputnik 1, by the Soviet Union on October 4, 1957.

Arguably the only comparison between Sputnik and Cassini is that they were both launched into space! Where (huge) Cassini has been responsible for virtually continuous transmission of data and pictures since its launch, the tiny Sputnik (a 585mm, 85kg sphere) was capable of "only" transmitting a series of beeps as it orbited the Earth.

Thousands of amateur radio operators listened out for the faint signals from Sputnik on 20.005MHz (close to the 21MHz amateur band and well within the capabilities of most amateur equipment using that band) and 40.002MHz (a VHF signal requiring more specialised receiving equipment).

What those thrilling at the sound of those 0.3s pulses didn't know was that they were also listening to the first data from space: Sputnik's radio signals from its one watt, 3.5kg transmitter were encoded with (quite elementary!) telemetry data, not only initially telling controllers of the satellite's successful deployment but during the flight, information on the electron density of the ionosphere along with satellite temperature and pressure.

After several unsuccessful test firings of R-7 launch vehicles, Sputnik was carried aloft on an 8K71PS rocket (itself a modified R-7) from Site No.1 at the 5th Tyuratam proving ground in Kazakh SSR (now known as the Baikonur Cosmodrome), at 19:28:34 UTC.

The control system of the Sputnik rocket had an intended orbit of 223 by 1,450km, with an orbital period of 101.5 minutes; the actual orbit turned out to be 223 x 950km with an orbit every 96.2 minutes.

There are several reasons for this difference – remember that even with the brightest minds in the Soviet Union working on the project, much of the work was theoretical, unproven technology.

## Not all to plan!

Even the launch didn't go exactly to plan: a booster failed to reach full power at lift-off, causing the rocket to tilt over at 2° just six seconds after lift-off. The booster reached full power just one second before the launch would have been automatically terminated. This would have caused the spacecraft to crash close to the launch pad.

Then 16 seconds into the flight, a fuel regulator in the booster also failed, resulting in excessive fuel consumption and 4% higher than expected engine thrust.

This resulted in termination of the thrust one second early – hence the

turday Evening, October 5, 1957 (UP)—Means United Press Price: Five Cent

# Russians Win Race To Launch Earth Satellite

## Man On Threshold Of Space Travel

By DANIEL F. GILMORE
United Press Staff Correspondent

LONDON (UP)—The pulsating radio "beep" of the first manmade earth satellite signalled today to the world that man had crossed the threshold into the age of travel through space.

The Soviet Union announced it had won the race into space by launching an earth satellite Friday, a 184-pound, 22-inch globe now orbiting the earth at 18,000 miles an hour, 560 miles up.

Millions of persons throughout the world heard the "beep...beep...beep..." rebroadcast today by local stations and realized that man had taken his first faltering steps into the new era.

Launching of the satellite was a tremendous victory for science. It was a more tremendous victory for Soviet propaganda to be able to trumpet to the world the Russians were the first to break through the frontiers of space.

**Bolsters ICBM Claims**

— WEATHER —

WEST VIRGINIA—Partly cloudy with highest in the 60s today and Sunday. Lowest tonight 50 west and 40 east portions.

VIRGINIA—Fair with lowest 45 to 50 west and north and 50 to 55 southeast portions tonight, Sunday mostly sunny and a little warmer. Tides on the coast and lower bay will run a foot or two above normal.

## How To Spot Satellite

By UNITED PRESS

Here's how to look for the Russian earth satellite which will be whizzing through the sky at 18,000 miles an hour.

The best time to spot it is at dawn or dusk when the sky is semi-dark. There is a chance that it could be seen if it travels across the face of the moon at night.

The best instruments to use are ordinary binoculars or telescopes. Powerful telescopes won't pick it up because of their narrow fields.

Through optical instruments, the satellite will look like the faintest star which can be seen with the naked eye.

Keep a sharp eye out. The satellite travels so fast it may appear on the horizon for only seconds and chances of spotting it have been estimated at one in a hundred.

## U.S. May Speed Up Satellite Program

By JOSEPH L. MYLER
United Press Staff Correspon

WASHINGTON (UP)—Amer scientists, caught flatfooted Russia's epic launching of the man-made moon, indicated t the United States may spee its own earth satellite progra

Leaders of the U.S. satellite gram also said that it ap Russia rocketed its heavy pound satellite into a globe dling orbit with a rocket to" an intercontinental be missile.

That could mean Russi only has beaten this country frontiers of space, but also t has been called the "ul weapon" for modern day wa ICBM. This country has n tested a successful ICBM.

American diplomats co Russia had scored a notabl aganda victory. The milita

## Epic-Making

# 60 Years since Sputnik

different orbit than expected. However, at 19.9 seconds after engine cutoff, the second stage separated and the radio transmitter was automatically activated, indicating a successful deployment.

Engineers listened to the "beep-beep-beep" for two minutes, until the craft disappeared below the horizon. They waited some 90 minutes until Sputnik was once again in "view" and confirmed radio reception, before calling Soviet premier Nikita Khrushchev.

TASS, the Soviet news agency, then announced to the world the successful launch and deployment.

Strangely enough (considering the times) it took some time for the Soviets to start making any real propaganda mileage out of Sputnik. But in the USA, the launch was met with some fear and trepidation with the realisation that they had, at least then, lost the lead in the "space race".

## Three week life

Sputnik had a design battery life of just 14 days – it continued to transmit for three weeks until its battery finally gave out. But the craft itself continued to orbit the Earth (where it could often be seen, depending on its height) for another three months, until it re-entered the Earth's atmosphere and burned up on January 4, 1958, having completed 1,440 orbits.

## How many Sputniks?

While there was only one Sputnik to claim the title of "the first", there were at least three (and possibly more) duplicates built. One of these, a complete system, is in the "Energia" corporate museum just outside Moscow, where it is viewable by appointment only.

Another is in the Museum of Flight in Seattle, Washington – while it has been authenticated (and even shows some signs of wear) it doesn't have any internal components. And there are said to be at least two other duplicates in private collections.

There are dozens of "replica" Sputniks in various museums and collections around the world – one even in Australia at Sydney's Powerhouse Museum.

And there were three student-built one-third scale Sputniks deployed from the Mir space station between 1997 and 1999 (the first launched to mark the fortieth anniversary of the original Sputnik). Yet another "went down with the ship" when Mir burned up on its controlled re-entry on March 23, 2001. SC

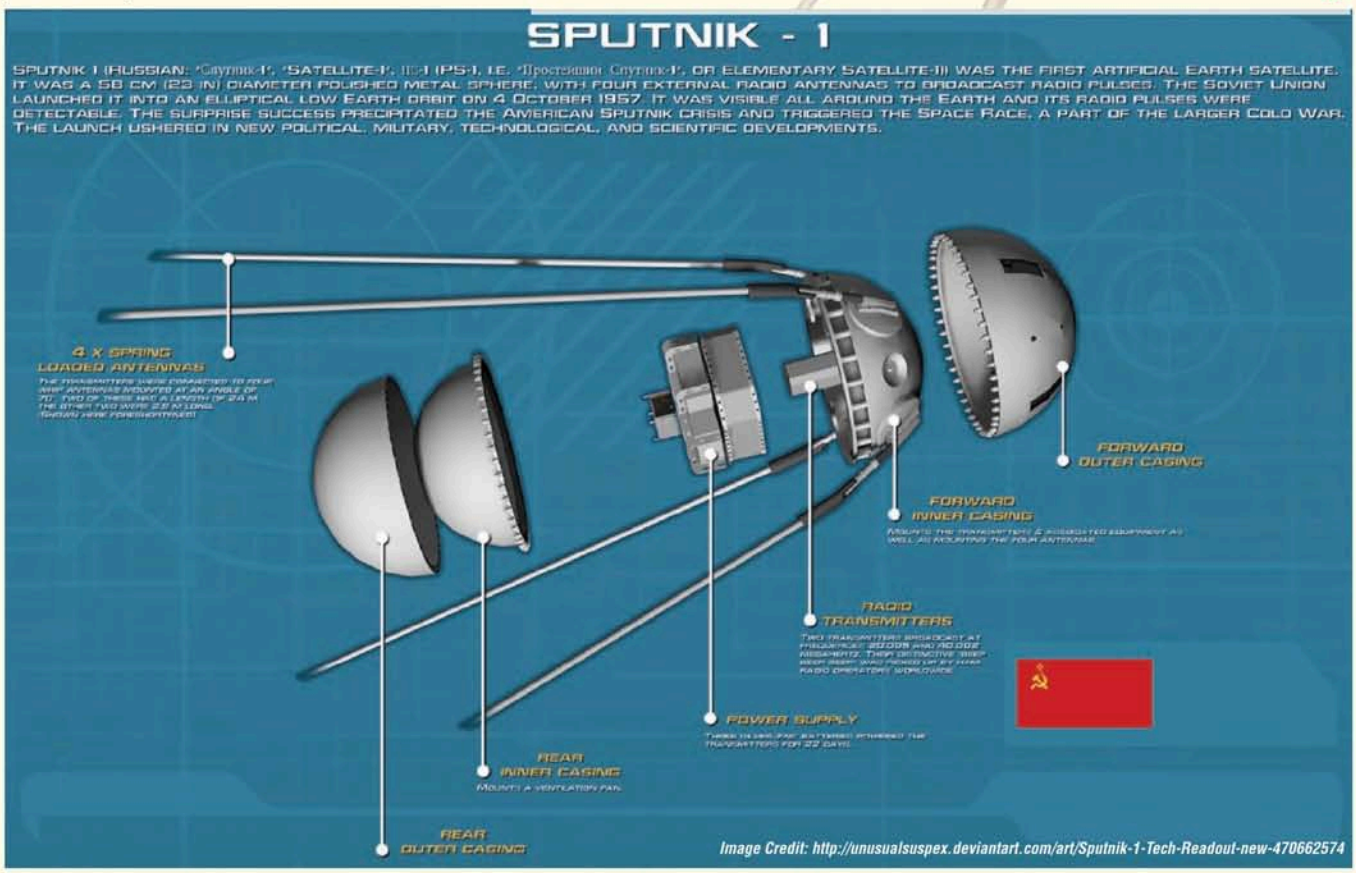

# 3-Way Fully Adjustable Stereo Active Crossover for Loudspeakers

**This Stereo 3-Way Adjustable Active Crossover is not only a fantastic tool for loudspeaker design and development but it can also be integrated into a 2-way or 3-way Active (powered) loudspeaker. The crossover points and levels for tweeter, midrange and woofer are fully adjustable with separate controls for each driver.**

**By JOHN CLARKE**

## FEATURES:

- Stereo crossovers
- 3-bands (Bass, Mid and Tweeter) or 2-band use (low pass and tweeter)
- Optional use of the bass output as a subwoofer output in 2-band mode
- Adjustable crossover frequencies
- Individual level controls for each band
- Overall volume control
- Balance control
- Limiter for Bass output (optional)

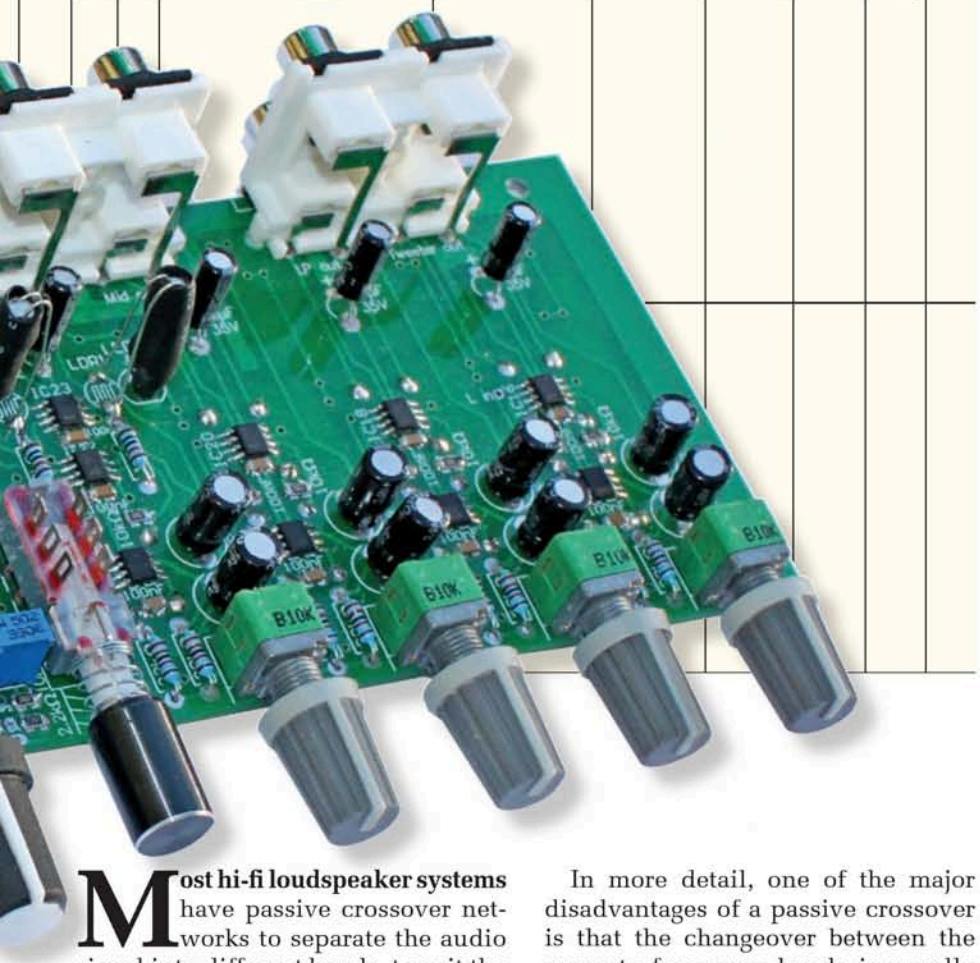

**Most hi-fi loudspeaker systems** have passive crossover networks to separate the audio signal into different bands, to suit the tweeters, midrange drivers and woofers. Passive crossovers comprise inductors, capacitors and resistors.

This approach can be simple and economical for a 2-way loudspeaker (ie, with tweeter and woofer) but it can be much more complex and expensive for 3-way loudspeakers (ie, with a midrange driver added), especially if there are big disparities between the efficiencies of the different drivers and if quite steep crossover roll-off slopes are required.

With active crossovers, it's easier to produce steeper roll-off rates and the signal level can be optimised for each driver via its own amplifier.

In more detail, one of the major disadvantages of a passive crossover is that the changeover between the separate frequency bands is usually not very sharp.

A typical crossover slope is only 6dB/octave or maybe 12dB/octave, in theory.

In practice, as we shall see, the slope can be much less and that means there is a wide frequency range over which the two drivers will be both producing the same sound frequencies.

That can mean that a woofer will be fed with higher frequencies than it ideally should (eg, above 1kHz) and the tweeter may be fed with lower frequencies (eg, below 1kHz). This means that both drivers are operating outside the regions where they produce the lowest distortion.

Of course, passive crossovers can be designed with steeper roll-offs, but these are more complex and expensive.

Another drawback with passive crossover design is that loudspeakers are not simply resistive, even though their nominal impedance may be 4Ω or 8Ω, for example. Impedance varies with frequency so an 8-ohm loudspeaker may only have an impedance of 8Ω at one frequency.

At other frequencies, the impedance can be lower or higher; maybe much higher than the nominal impedance.

So why does the impedance value vary? Because all loudspeakers have inductance.

Loudspeaker impedance also varies because of cone resonances and in the case of the woofer, due to the air loading on the speaker cone inside the box. These need to be compensated for if the crossover is to work correctly.

(The lowest impedance value for a loudspeaker will typically be just above its cone resonant frequency and will be close to its DC resistance).

This why you cannot take a passive crossover off the shelf and hope that it will work well with a random selection of drivers mounted in a given enclosure.

Nor can you simply substitute a tweeter or woofer for the original drivers in a loudspeaker system with a passive crossover network – it is not likely to work well!

## Solving the problems

By contrast, active crossovers can solve many of the above problems. Firstly, the frequency overlap between two loudspeaker drivers can be minimised by steep roll-off slopes.

Secondly, the impedance of each driver does not affect the crossover frequency. Nor is there any interaction between the crossover components, as can be the case in passive crossover networks.

Thirdly, the electrical damping of the driving amplifier is not reduced by the impedance of the components in a passive crossover.

This means better damping of woofer cone motion, ie, lower distortion and less boominess.

OK, so active crossovers do have advantages but most designs are not easily adjustable without changing lots of components.

Our new design is fully adjustable

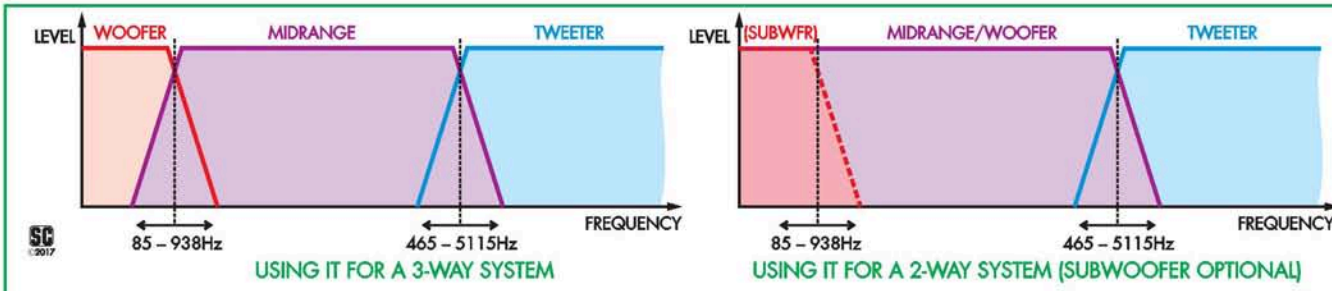


**Fig.1: the stereo audio signal is split into three separate stereo signals covering different frequency ranges, to suit the woofers, mid-range drivers and tweeters. For a two-way system, the third signal can optionally be used for subwoofer(s).**

for both crossover frequencies and driver signal levels – just use the control knobs!

## Low pass, high pass

Before we go any further we should explain some terms which often confuse beginners: low-pass, high-pass and band-pass filters.

Exactly as its name suggests, a low-pass filter is one that allows low frequencies to "pass" through it and it blocks the higher frequencies.

Hence, a circuit to drive a subwoofer would be called a low-pass filter since it only delivers frequencies below 200Hz or thereabouts.

Similarly, a high-pass filter is one that allows high frequencies to pass through it and it blocks low frequencies. The part of a crossover network which feeds a tweeter is said to be a high-pass filter, even though it may consist of only one capacitor.

You would probably realise that as the frequency drops, the impedance of a given capacitor increases, hence blocking the higher frequencies.

(Incidentally, the ultra-handy Silicon Chip Inductance/Capacitance Ready Reckoner Giant Wall Chart (see www.siliconchip.com.au/l/aaek or www.siliconchip.com.au/Shop/3/3302) demonstrates this perfectly – you nominate a capacitance value and as you move up the frequency scale, you can see that the impedance increases. If you're designing filter circuits, this chart is a *must*!).

If we cascade (ie, connect in series) a high-pass filter with a low-pass filter, the combination will pass a band of frequencies and we then refer to it as a "band-pass filter." We use a band-pass filter for the midrange output in this active crossover circuit.

Other points you need to know about high and low-pass filters are the so-called cut-off frequency and the filter slope roll-off.

Typical filter slopes are specified in dB/octave where the dB (decibel) term is the attenuation. Typical slopes are -6dB/octave (quite gradual), -12dB/oc-

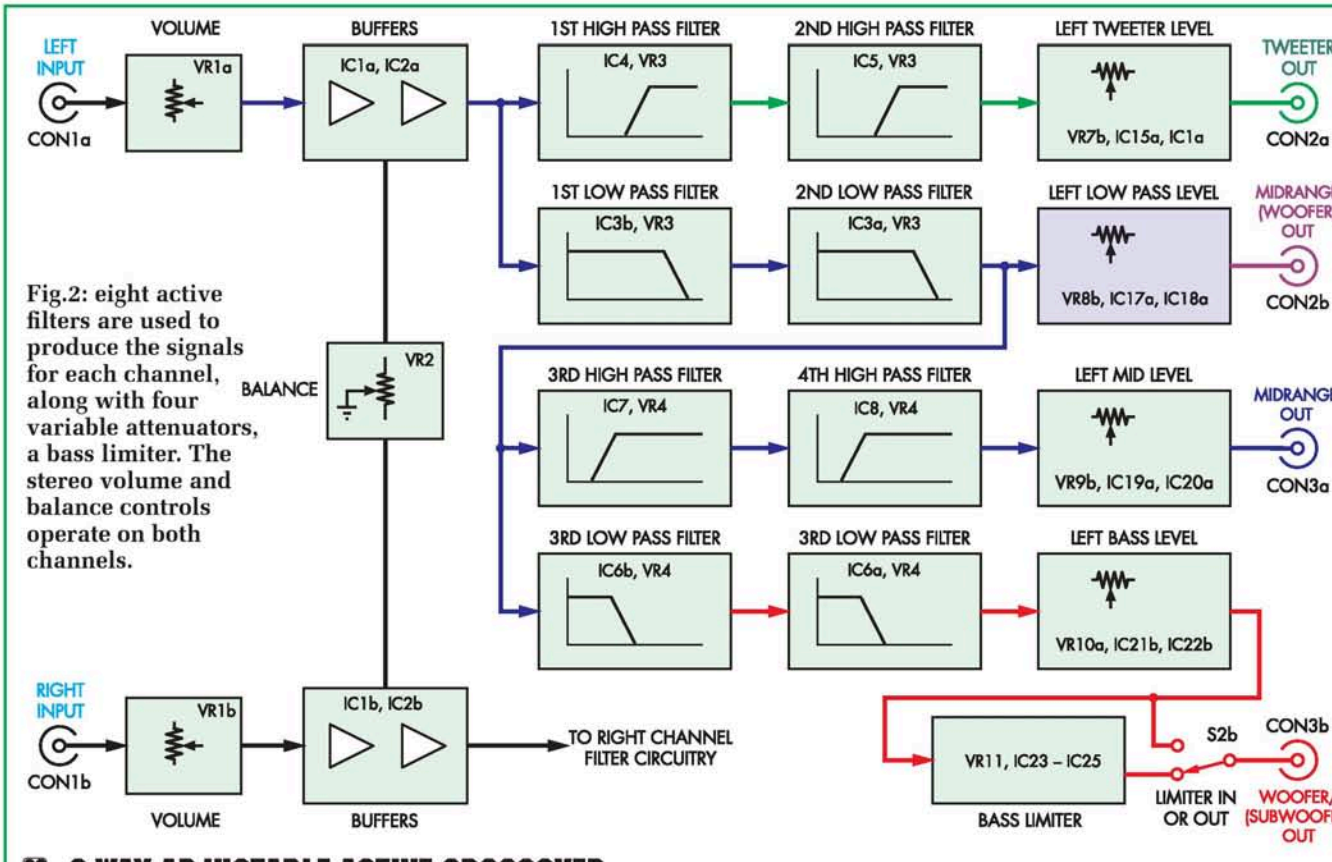


**Fig.2: eight active filters are used to produce the signals for each channel, along with four variable attenuators, a bass limiter. The stereo volume and balance controls operate on both channels.**

**3-WAY ADJUSTABLE ACTIVE CROSSOVER** BLOCK DIAGRAM (LEFT CHANNEL ONLY)

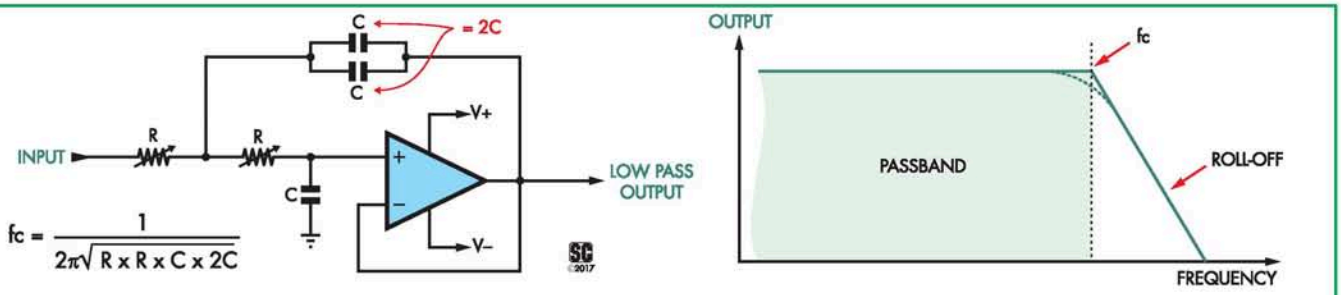


**Fig.3(a): this is the configuratio of each second-order low-pass filter, which is known as a Sallen-Key type. Its expected frequency response is shown at right. Note that the variable resistances required are of the same value.**

tave, -18dB/octave and -24dB/octave (quite steep for a crossover network).

The filter slope applies for frequencies after the cut-off frequency. The cut-off frequency is where the signal output is -3dB down on the normal level.

For example, in a low-pass filter we might have a cut-off frequency of 1kHz (ie, -3dB point) and at slightly above that frequency, the slope will be -12dB/octave. And for the filters described here, this means that the response at 2kHz (ie, one octave above) will be -12dB and at 4kHz it will be -24dB.

## Two or three filter bands?

Fig.1(a) shows the three filter bands available with our new Active Crossover. While it may not be immediately apparent, this involves two crossover points and no fewer than four filters.

Starting from the left-hand side, we have a low-pass filter for the bass frequencies and it "crosses over" to a high-pass filter for the midrange frequencies. Further up the audio spectrum, we have another low-pass filter which blocks out higher frequencies and then it "crosses over" to another high-pass filter which handles the frequencies fed to the tweeter.

Note that when we shift the low crossover frequency, we are actually simultaneously changing the cut-off frequencies of the respective low-pass and high-pass filters – they are ganged together.

Similarly, when we shift the high crossover frequency, we simultaneously change the cut-off frequencies for the midrange low-pass and upper high-pass filters.

Fig.1(a) shows the new Active Crossover used in a 3-way configuration, with bass (woofer), midrange driver and tweeters.

But Fig.1(b) shows that it could be used in an alternative configuration as a 2-way system with a midrange/woofer and a tweeter, together with an optional subwoofer. The circuitry remains the same but the way you connect is a little different. We will talk about that later.

## Block Diagram

Fig.2 shows the block diagram for the 3-Way Adjustable Active Crossover. Only the left channel is shown; the right channel is identical.

It actually comprises four low-pass and four high-pass filters. Hmm, we just mentioned that only four filters were needed to produce the three bands shown in Fig.1. Why are there now eight filters involved?

Patience, now – all will be revealed!

The left and right channel inputs are fed to a stereo volume control (VR1a and VR1b) and the signal is then buffered with op amps IC1a & IC1b and their outputs connect to the balance control, VR2.

After further buffering by op amps 1C2a & IC2b (for the right channel), the signal is passed to two adjustable high pass filters involving IC4 and IC5 (signal path in green) and also fed to two adjustable low pass filters involving IC3 (signal path in blue).

The signal from the high-pass filters is fed to the tweeter level control and then to the tweeter output, CON2a. The signal from the low-pass filters is fed to a second pair of adjustable high-pass filters involving IC7 & IC8 and to a second pair of adjustable low-pass filters involving IC6.

The output from the second pair of high-pass filters is fed to the midrange level control and then to the midrange output, CON3a.

The output from the second pair of low-pass filters is fed to the bass level control (signal path in red) and then goes via the bass limiter (can be switched in or out) to the woofer (or subwoofer) output, CON3b.

Why do we need a bass limiter? Because we envision that in some applications, the bass output will need to be boosted substantially and that could lead to overload of the woofer or woofer driver amplifier on loud pas-

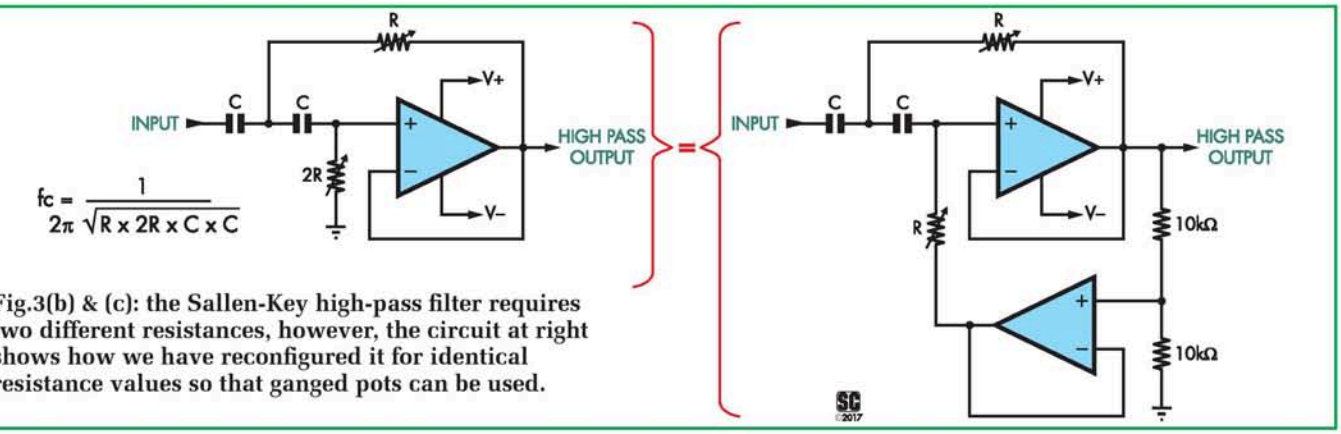


**Fig.3(b) & (c): the Sallen-Key high-pass filter requires two different resistances, however, the circuit at right shows how we have reconfigured it for identical resistance values so that ganged pots can be used.**

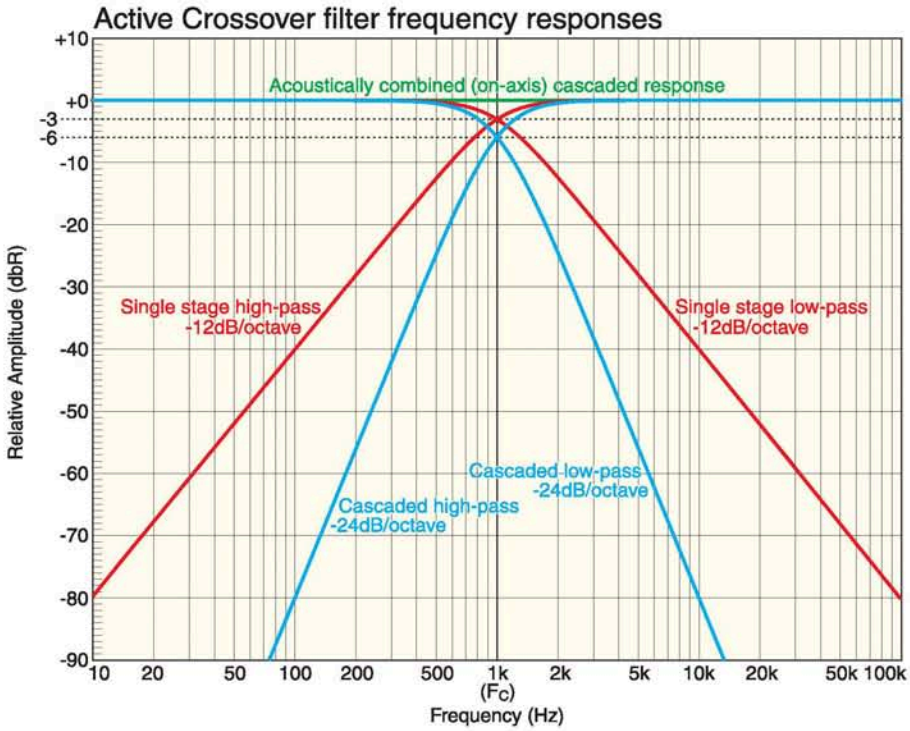


**Fig.4: the simulated response of a single pair of Sallen-Key low-pass/high-pass filters with a corner frequency of 1kHz (red) and the cascaded pairs of Sallen-Key filters (red), known as a Linkwitz-Riley arrangement. The flat green line shows the overall response when the signals are acoustically summed.**

sages (hint: see page 33!).

The bass limiter will prevent this while having negligible effect on the signal at other times.

## Two-way configuration

As noted above, this Active Crossovers can also be built as a 2-way system with an optional subwoofer output. In that case, you would have a tweeter output (CON2a), the midrange/woofer output (CON2b) and the subwoofer output (CON3b). The circuitry for IC6, IC7 & IC8 could then be omitted.

So now let us explain why we need eight active filters in each channel rather than four.

Fig.3 a, & b show the basic circuits for the low-pass and high-filters used in our Active Crossover.

Let's talk about the low-pass filter first, as shown in Fig.3(a). This consists of a single op amp together with two identical (adjustable) resistors R and two capacitors, C and 2C. (2C is actually two identical capacitors in parallel). The op amp is connected as a unity-gain buffer and because it uses two RC networks, it is a second-order filter which gives a roll-off slope of 12dB/octave.

The basic design is referred to as a Sallen-Key filter (after R. P. Sallen and E. L. Key of MIT Lincoln Laboratory in 1955).

The graph to the right of the circuit shows the roll-off slope beyond the cut-off frequency ($f_c$). The passband region refers to the frequencies below fc where the signal level is mostly unaffected by the filter.

For this particular circuit, the filter has a Q of 0.7071 and has a Butterworth response. The Q value means that the frequency response below $f_c$ remains as flat as possible rather than with any amplitude ripple or peaking.

The equation for calculating the $f_c$ for the filter is shown (in Fig.3(a)) though this calculation only applies to a Butterworth filter.

## High-pass filter

By swapping the resistors and capacitors in the circuit of Fig.3(a), we can obtain a high-pass filter, as shown in Fig.3(b).

Once again this arranged to have a Butterworth response with a Q=0.7071 but instead of having capacitors with values of C and 2C, we have resistors of 2R, between the non-inverting input of the op amp and ground, and R at the output of the op amp.

Both these resistive elements are adjustable using potentiometers and that presents a big problem since our Active Crossover uses an 8-gang potentiometer for each crossover output; each potentiometer element needs to have the same value, eg, 10kΩ.

To solve that problem, we use an extra op amp, as shown in Fig.3(c). The second op amp is connected as a unity gain buffer and is driven from a voltage divider connected to the output of the first op amp, to drive the bottom end of the potentiometer (R).

This resistor now has half the signal current through it and so acts as though it has a value of 2R – which is what we want.

So that shows the configuration of all the low-pass and high-pass filters in the circuit but it does not explain why we using four of each.

The reason is that the circuits of Fig.3 are second-order filters and their filter slopes are equal to 12dB/octave which is not particularly steep – we want twice that: 24dB/octave. So we use identical cascaded low-pass and high-pass filters to get the desired result.

We simulated the filter circuits using LTspice to obtain the actual responses for the filters.

If you use LTspice or are following our series on this in SILICON CHIP, you may wish to use the SPICE file. This file (Active filter.asc) will be available from the SILICON CHIP website.

Fig.4 shows the results for the low-pass filter when the cut-off frequency is 1kHz. The response for the single stage Butterworth

## Calculating R & C

If you wish to do some calculations of responses for these filters, an excellent website is available. This calculates the filter responses for the Sallen-Key configuration and shows plots and filter Q for values of R and C.

For the low pass filter C1 is the capacitor that needs to be twice in value to C2. R2 is double the resistance of R1 in the high pass filter.

For a cut-off of 1kHz (fc), use 22nF for C (44nF for twice the value) and 5.11543kΩ for R (10.23086kΩ for twice the value).

For the high pass filter see: siliconchip.com.au/l/aaei

For the low pass filter see: siliconchip.com.au/l/aaej

# High Impact Embedded Graphics GUI Design Has Never Been This Simple

## Free Visual Design Tools & Graphics Libraries for Your GUI Applications

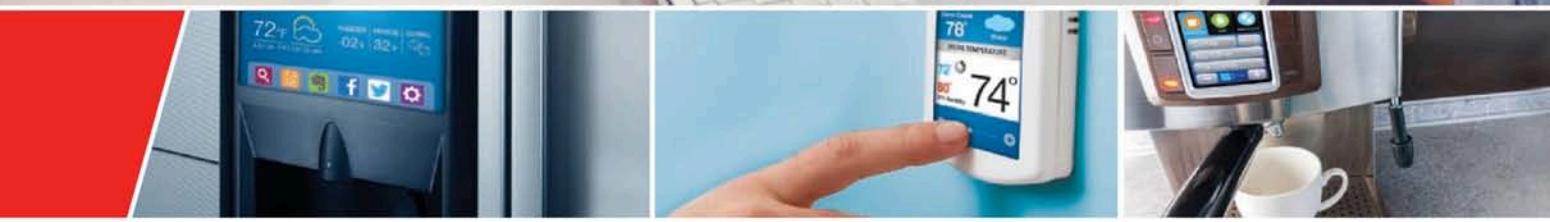

Microchip offers an industry leading complement of comprehensive visual Graphical User Interface (GUI) development tools, software graphics libraries and hardware tools for all your 32-bit graphics needs.

Our graphics solutions are supported with the free MPLAB® Harmony software framework and offers developers the choice of two best-in-class tools:

1. Our MPLAB® Harmony Graphics Composer works in conjunction with our MPLAB Harmony Graphics Library to help you generate professional looking GUIs without writing a single piece of code!

OR

2. You may chose SEGGER emWin Pro as your graphics library and take advantage of its expansive list of widgets and the SEGGER toolchain.

Get started today by downloading training material, documentation and tools!

Multimedia Expansion Board II (DM320005-2)

**Contact Information**
Microchip Technology Australia
Email: aust_nz.inquiry@microchip.com
Phone: +61 (2) 9868-6733

**www.microchip.com/MCU32GFX**

microchip DIRECT
www.microchipdirect.com

MPLAB HARMONY

MICROCHIP

The Microchip name and logo, the Microchip logo and MPLAB are registered trademarks of Microchip Technology Incorporated in the U.S.A. and other countries. All other trademarks are the property of their registered owners. © 2017 Microchip Technology Inc. All rights reserved.

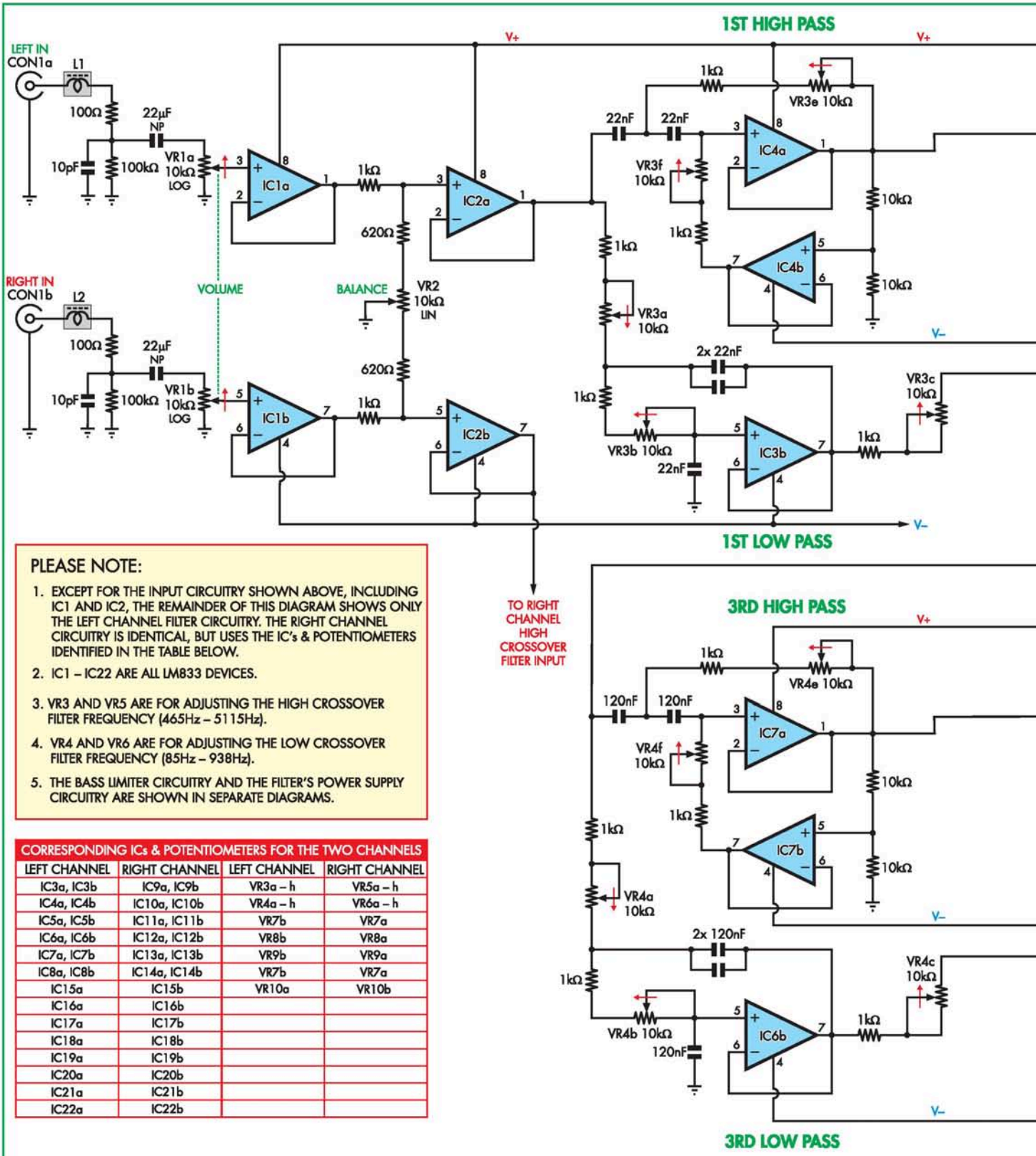


## PLEASE NOTE:

1. EXCEPT FOR THE INPUT CIRCUITRY SHOWN ABOVE, INCLUDING IC1 AND IC2, THE REMAINDER OF THIS DIAGRAM SHOWS ONLY THE LEFT CHANNEL FILTER CIRCUITRY. THE RIGHT CHANNEL CIRCUITRY IS IDENTICAL, BUT USES THE IC's & POTENTIOMETERS IDENTIFIED IN THE TABLE BELOW.
2. IC1 – IC22 ARE ALL LM833 DEVICES.
3. VR3 AND VR5 ARE FOR ADJUSTING THE HIGH CROSSOVER FILTER FREQUENCY (465Hz – 5115Hz).
4. VR4 AND VR6 ARE FOR ADJUSTING THE LOW CROSSOVER FILTER FREQUENCY (85Hz – 938Hz).
5. THE BASS LIMITER CIRCUITRY AND THE FILTER'S POWER SUPPLY CIRCUITRY ARE SHOWN IN SEPARATE DIAGRAMS.

| CORRESPONDING ICs & POTENTIOMETERS FOR THE TWO CHANNELS | | | |
|---|---|---|---|
| LEFT CHANNEL | RIGHT CHANNEL | LEFT CHANNEL | RIGHT CHANNEL |
| IC3a, IC3b | IC9a, IC9b | VR3a – h | VR5a – h |
| IC4a, IC4b | IC10a, IC10b | VR4a – h | VR6a – h |
| IC5a, IC5b | IC11a, IC11b | VR7b | VR7a |
| IC6a, IC6b | IC12a, IC12b | VR8b | VR8a |
| IC7a, IC7b | IC13a, IC13b | VR9b | VR9a |
| IC8a, IC8b | IC14a, IC14b | VR7b | VR7a |
| IC15a | IC15b | VR10a | VR10b |
| IC16a | IC16b | | |
| IC17a | IC17b | | |
| IC18a | IC18b | | |
| IC19a | IC19b | | |
| IC20a | IC20b | | |
| IC21a | IC21b | | |
| IC22a | IC22b | | |

## SC 2017 3-WAY ADJUSTABLE ACTIVE CROSSOVER MAIN CIRCUIT (LEFT CHANNEL FILTERS ONLY)

**Fig.5: the main portion of the Active Crossover circuit, built around 22 LM833 dual low-noise/low distortion op amps. The layout is similar to that of block diagram Fig.2, so you should be able to identify the corresponding sections. VR3-VR6 are four eight-ganged 10kΩ linear potentiometers which allows the corner frequency of each set of four active filters which makes up a crossover network to track. So only two adjustments need to be made to change the crossover point for either bass/midrange or midrange/tweeter. The bass limiter and power supply sections of the circuit are shown separately.**

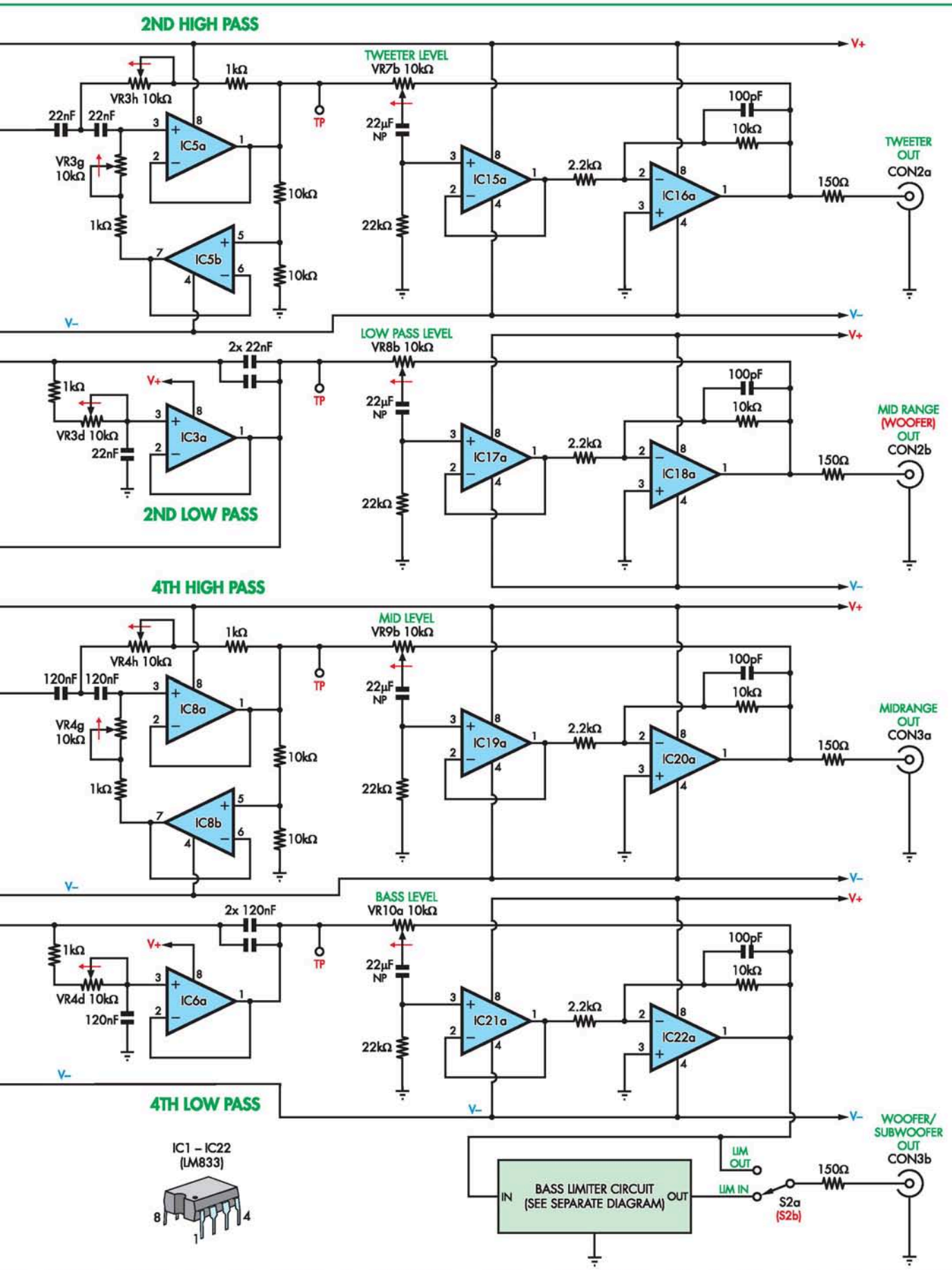
2ND HIGH PASS
TWEETER LEVEL
VR7b 10kΩ
VR3h 10kΩ
1kΩ
22nF
22nF
IC5a
VR3g
10kΩ
1kΩ
IC5b
10kΩ
10kΩ
TP
22µF
NP
22kΩ
IC15a
2.2kΩ
IC16a
100pF
10kΩ
150Ω
TWEETER
OUT
CON2a
V+
V–
LOW PASS LEVEL
VR8b 10kΩ
2x 22nF
1kΩ
VR3d 10kΩ
22nF
IC3a
IC17a
IC18a
MID RANGE
(WOOFER)
OUT
CON2b
2ND LOW PASS
4TH HIGH PASS
MID LEVEL
VR9b 10kΩ
VR4h 10kΩ
120nF
120nF
IC8a
VR4g
10kΩ
IC8b
IC19a
IC20a
MIDRANGE
OUT
CON3a
BASS LEVEL
VR10a 10kΩ
2x 120nF
VR4d 10kΩ
120nF
IC6a
IC21a
IC22a
4TH LOW PASS
IC1 – IC22
(LM833)
BASS LIMITER CIRCUIT
(SEE SEPARATE DIAGRAM)
IN
OUT
LIM
OUT
LIM IN
S2a
(S2b)
WOOFER/
SUBWOOFER
OUT
CON3b

filter is 3dB down at the cut-off frequency. At 10kHz (one decade away) the response is down by 40dB, as expected. That's a 40dB per decade (or 12dB/octave) roll-off.

When the two filters are cascaded, we get a response that is referred to as "Butterworth squared" (also called a Linkwitz-Riley) filter. The combined filter Q is 0.5; obtained by multiplying the Q (0.7071) of each Butterworth stage together. The cascaded filter response is 6dB down at $f_c$ and 80dB down at 10kHz.

Putting it another way, the combined filter slope, beyond $f_c$, is 24dB/octave.

Similar results for the low-pass filter are also shown in Fig.4; -3dB down at 1kHz for the single stage and 6dB down at 1kHz for the cascaded filters. At 100Hz (one decade away), response is 40dB down for the single stage filter and 80dB down for the cascaded filter.

We use the Linkwitz-Riley filters because when both the low and high pass filters are summed, acoustically the response is flat.

Using the Linkwitz-Riley filters means that there are no dips or peaks in the frequency response across the crossover frequency region.

For more information on Linkwitz-Riley filters, see **siliconchip.com.au/l/aaeh**

The left and right channels have separate frequency adjustments. Ideally, both left and right channels should be able to be adjusted together for the same crossover frequencies. However, we were not able to do this easily and we shall see why later.

## Main circuit

The main circuit of the Active Crossover is shown in Fig.5 and again, this only shows the left channel. Just so you can recognise the various low-pass and high-pass filters, dual op amps IC4 and IC5 are the cascaded first and second high-pass filters while dual op amp IC3b and IC3a are the cascaded first and second low-pass filters.

All op amps in the circuit are LM833s for very low noise and distortion.

Similarly, dual op amps IC7 and IC8 are the cascaded third and fourth second high-pass filters while dual op amp IC6b and IC6a are the cascaded third and fourth low-pass filters.

Also note that all the potentiometer elements for the filters of IC3, IC4 and IC5 are part of the same 8-ganged potentiometer, VR3. Similarly, all the potentiometer elements for the filters of IC6, IC7 and IC8 are part of the same 8-ganged potentiometer, VR4.

However, that means that this Active Crossover is not able to simultaneously adjust the crossover frequencies in both channels; each channel must be done separately. If we wanted to do both channels simultaneously, we would need 16-element pots and that is simply not practical.

However, the level adjustments for each channel output are made using dual ganged pots, so these are done simultaneously.

Now let's track the signal through the crossover circuitry. The input signal is applied to an RF suppression network comprising ferrite bead L1, a 100Ω stopper resistor and a 10pF capacitor. The signal is then coupled to the volume control VR1a via a 22µF non-polarised capacitor.

The signal from the wiper of VR1is buffered by IC1a and its output is con-

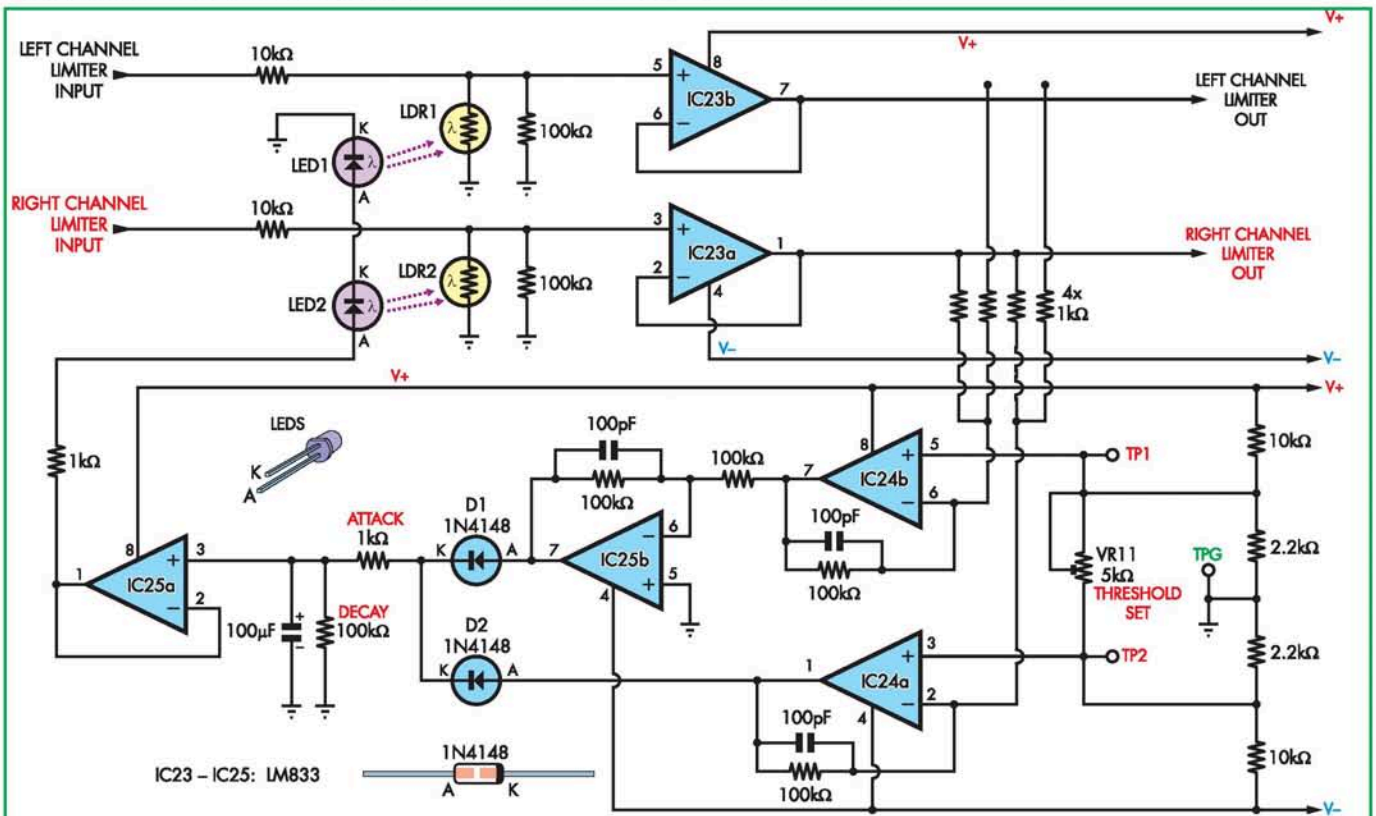


**3-WAY ADJUSTABLE ACTIVE CROSSOVER** BASS LIMITER CIRCUIT

**Fig.6: the bass limiter circuitry, which prevents bass drivers which are driven with significant levels of gain from being overloaded. It uses pairs of LEDs and LDRs to form a variable gain amplifier for each channel, similar to a compressor but with a much longer attack and decay times.**

## Coming soon: a 3-way active dipole loudspeaker

One of the main reasons why we have produced this highly flexible 3-way active crossover is that we are developing a 3-way active dipole loudspeaker with some most unusual features. For a start, there is no enclosure. All three drivers are mounted on a simple baffle. How can that possibly work? Don't you need some sort of enclosure in order to produce adequate bass response? Normally, the answer is a resounding "yes!" but we have taken a similar approach to speaker design in producing a dipole loudspeaker – it radiates equally from the front and rear of the baffle.

Doesn't that lead to bass cancellation? Yes it does but a dipole enclosure can work well in a small room provided there is considerable bass boost. That is just not possible with a passive crossover but our new 3-way active crossover makes it quite simple to achieve, because it allows large differences in the signal power applied to each driver.

We hope to feature this most interesting loudspeaker system in a few months. Watch out for it!

nected to one side of the balance balance control, VR2.

The balance control has a limited range of action and it works as follows. When centred, there is an equal loss in signal level for both channels that amounts to -1.42dB.

When the pot is rotated off centre, more signal is shunted to ground in one channel than in the other channel.

When the balance pot is rotated fully in one direction, it causes a loss of 8.3dB in one channel and slight increase in the other. So there is an overall 8.9dB change in level between one channel and the other.

Following the balance control, the signal is again buffered by IC2a and then fed to the first high-pass and first low-pass filters involving IC4 and IC3, respectively.

So the signal progresses through the first and second high-pass filters of IC4 and IC5 and also to the first and second low-pass filters of IC3b and IC3a.

Then the respective tweeter and midrange signals are fed to the respective level controls, involving VR7b and VR8b.

These are Baxandall circuits which give a logarithmic response when using a linear potentiometer. This is highly desirable since we want to use linear dual ganged pots and these have far better matching and tracking between channels than logarithmic taper pots.

Two op amps are involved for each level control. The tweeter control, VR7b, involves op amp IC15a, configured as buffer, and IC16a, an inverting op with a gain of 4.5.

Hence the overall gain range of the circuit is from unity to 4.5 which is more than adequate for this application. Another advantage of this Baxandall level control is that it reduces noise at the lower gain settings.

### Further filter stages

The output of the second low-pass filter involving IC3a is also fed to the third and fourth high-pass filters involving op amps IC7 and IC8 and also to the third and fourth low-pass filters involving IC6b and IC6a.

The output of the fourth high-pass filter IC8a is fed to the midrange level control VR9b involving op amps IC19a and IC20a.

Finally, the output of the fourth low-pass filter IC6a is fed to the bass level control VR10a involving op amps IC21a and IC22a.

However, the bass level control can also be fed to the bass limiter which can

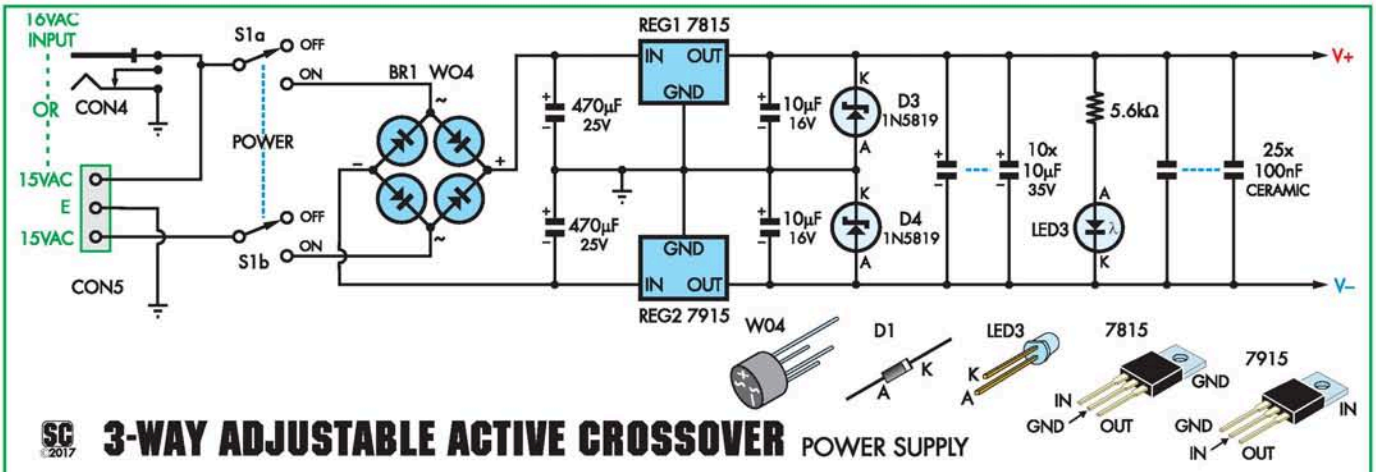


**Fig.7: the power supply section of the circuitry, which is on the same PCB as the rest. Power can come from either an AC plugpack or centre-tapped mains transformer. The transformer output is rectified, filtered and regulated to produce the ±15V supply rails for the op amps.**

## Parts List – Three-Way Active Crossover

1 main PCB, coded 01108171, 284 x 77.5mm
1 front panel PCB, coded 01108172, 296 x 43mm
1 rear panel PCB, coded 01108173, 296x 43mm
1 16VAC 1A (or higher current) plugpack
2 DPDT PCB mount push button switches (Altronics S1510) (S1,S2)
2 knobs to suit push button switches S1 & S2 (Altronics H6651)
1 two-way vertical stacked PCB-mount RCA socket (Altronics P0210) (CON1)
2 four-way vertical stacked PCB-mount RCA sockets (Altronics P0211) (CON2,CON3)
4 knobs to suit VR3-VR6 (Mouser 5164-1227-J)
6 knobs to suit VR1,VR2,VR7-VR10) (Jaycar HK-7734)
2 TO-220 heatsinks, 19 x 19 x 9.5mm (Jaycar HH-8502)
1 PCB-mount 2.5mm DC power socket (Jaycar PS-0520, Altronics P0621A) (CON4)
1 2.5mm DC line plug (Altronics P-0635A, Jaycar PP-0511)
1 3-way PCB-mount screw terminals with 5.08mm spacing (CON5)
2 5mm ferrite suppression beads (L1,L2)
2 ORP12 (or equivalent) LDRs (Jaycar RD-3480)
1 50mm length of 6mm diameter black heatshrink tubing
1 set of black Acrylic case pieces (SC4403)
8 16mm long M3 tapped spacers
4 9mm long M3 tapped Nylon spacers
4 M3 x 32mm machine screws
4 M3 x 5mm black machine screws
2 M3 x 6mm screws & nuts
4 self-adhesive or screw-on rubber feet

**Semiconductors**

25 LM833D SOIC (SMD) dual op amps (IC1-IC25)
1 7815 +15V three-terminal regulator (REG1)
1 7915 -15V three-terminal regulator (REG2)
2 1N4148 diodes (D1,D2)
2 1N5819 Schottky diode (D3,D4)
1 W04 1.2A bridge rectifier (BR1)
2 5mm 7500mcd green LEDs (Jaycar ZD-0172) (LED1,LED2)
1 3mm blue LED (LED3)

**Capacitors**

2 470µF 25V PC electrolytic
1 100µF 16V PC electrolytic
10 22µF NP 50V PC electrolytic
12 10µF 35V (or greater) PC electrolytic
20 120nF 63V or 100V MKT polyester
25 100nF X7R 50V SMD (1206) ceramic
20 22nF 63V or 100V MKT polyester
11 100pF X7R 50V SMD (1206) ceramic
2 100pF 50V ceramic

**Resistors** (0.25W, 1%, through-hole or 1206 SMD as specified)

| | | | | | | | | | |
|---|---|---|---|---|---|---|---|---|---|
| 2 | 100kΩ | 7 | 100kΩ SMD | 8 | 22kΩ | 2 | 10kΩ | 26 | 10kΩ SMD |
| 1 | 5.6kΩ | 8 | 2.2kΩ | 2 | 2.2kΩ SMD | 2 | 1kΩ | 37 | 1kΩ SMD |
| 2 | 620Ω | 8 | 150Ω | 2 | 100Ω | | | | |

**Potentiometers and trimpots**

1 10kΩ log dual 9mm potentiometer (Jaycar RP-8756) (VR1)
1 10kΩ linear single 9mm potentiometer (Jaycar RP-8510) (VR2)
4 10kΩ linear 8-gang 9mm potentiometers, Bourns PTD9081015FB103 (VR3-VR6) (Mouser)
4 10kΩ linear dual 9mm potentiometers (Jaycar RP-8706) (VR7-VR10)
1 5kΩ 25-turn top adjust 3296W style trimpot (VR11)

be switched in or out using switch S2.

### Limiter circuit operation

The Limiter circuit is shown in Fig.6 and it acts on the signals from both channels, left and right.

In essence, the bass signal from each channel (left from IC22a; right from IC22b) is fed to a passive attenuator comprising a 10kΩ resistor, a 100kΩ resistor to ground and a paralleled light-dependent resistor (LDR). LDR1 is used for the left channel and LDR2 for the right channel.

Normally, the LDR resistance will be very high and the reduction in signal level will be less than 1dB. Op amp IC23b buffers the signal from LDR1, while IC23a buffers the right-channel signal from LDR2.

Each LDR is located next to a LED and both are encased in a light-proof housing (made of heatshrink tubing). So light from LED1 can reduce the resistance of LDR1 and LED2 does the same for LDR2. Both LEDs are driven with the same current so that the signal level in both channels is reduced by the same amount.

The drive signals to LED1 & LED2 are derived by dual op amps IC24 and IC25. The bass signals from IC23a and IC23b connect to the inverting inputs of IC24a and IC24b via 1kΩ resistors which mix the signals from both channels.

These amplifiers have a gain of 100 by virtue of their 1kΩ input and the 100kΩ feedback resistors.

The amplifiers also have their non-inverting inputs connected to separate voltage references formed using a resistive divider across the ±15V supply.

The attenuator comprises a 10kΩ resistor from the +15V supply, two 2.2kΩ resistors and another 10kΩ resistor to the -15V supply.

The centre point of the attenuator where the two 2.2kΩ resistors meet is connected to the ground (0V). A 5kΩ trimpot (VR11) connects across the two 2.2kΩ resistors and can be used to adjust the voltages at TP1 and TP2.

With VR11 set for 5kΩ, the voltage at TP1 and TP2 will be +1.57V and -1.57V respectively. This voltage can be reduced down to 0V, with VR11at the opposite extreme.

When the combined signal from IC23a and IC23b swings positive but less than the TP1 voltage, IC24b's output will be high; ie, above 0V. When the combined signal from IC23a and IC23b swings negative but less nega-

tive than TP2, IC24a's output will be low; less than 0V. In effect, IC24b & IC24a operate together as a window comparator.

The signal from IC24b is inverted by IC25b, change any negative-going signal to positive-going. Then the positive going signals from IC25b and IC24a are fed to diodes D1 and D2, respectively.

So any positive-going signal from IC25b or IC24a will cause D1 or D2 to conduct and charge the 100µF capacitor via the 1kΩ resistor.

IC25a monitors the signal across the 100µF capacitor and drives LED1 & LED2 (in series) and these LED control the resistance of LDR1 & LDR2 to limit the bass signals when the exceed the thresholds set by TP1 & TP2.

The time constant for the 100µF capacitor to discharge via the 100kΩ resistor is ten seconds. This time-constant prevents the audio signal from being modulated by the limiter circuit.

The associated 1kΩ resistor sets the attack time-constant to 100ms, so that limiting does not instantly occur with brief transients.

Note that the maximum 1.57V threshold at TP1 and -1.57V threshold at TP2 will start signal limiting for a sine wave that's 1.57V peak or 3.14V peak to peak. That is about 1.1V RMS.

## Power supply

Fig.7 shows the power supply circuit. It can be powered using a centre-tapped 30V transformer or a 16VAC plugpack – either transformer feeds the bridge rectifier via switch S1.

However, the bridge rectifier works differently, depending on which transformer is used.

The 16VAC plugpack connects via CON4 with one side going to ground while the centre-tapped transformer connects to 3-pin CON5. The net result is only two diodes are involved when the power comes via CON4 and S1a and we have half-wave rectification for the positive and negative rails fed to the 3-terminal 15V regulators.

When the power comes via CON5, the full bridge rectifier is involved. Either way, the rectified DC is filtered using 470µF capacitors.

## Next month . . .

Have we whetted your appetite sufficiently with the description of the Three-Way Active Crossover?

Next month, we'll move on to the construction, setup and use of this project.


**LOOKING FOR A PCB?**

PCBs for most recent (>2010) SILICON CHIP projects are available from the SILICON CHIP PartShop – see the PartShop pages in this issue or log onto

**siliconchip.com.au/shop**

You'll also find some of the hard-to-get components to build your SILICON CHIP project, back issues, software, panels, binders, books, DVDs and much more!


So in the meantime, use the parts list opposite to start gathering the bits you'll need (there are some that aren't normally available from your local lolly shop!) and get the PCB from the SILICON CHIP online shop (they're already available, priced at only $20.00 plus P&P) – and remember, if you're a SILICON CHIP subscriber, you get 10% off all items from the shop (subscriptions and postage excepted).

While you're about it, why not order one of the giant L-C-R Wallcharts as well – you won't believe how handy it will be in your workshop! SC


**MPPT REGULATOR + SOLAR PANELS PACKAGE**

Includes
1x **12-24V 40A 150V MPPT Solar Regulator**
+ 4x **FS272 72W Solar Panels.**

*Charge 12/24V batteries at 30/15A: 280W!!*

IT118..... **$249**

FOR PICK-UP ONLY from WOY WOY (or maybe SYDNEY)

**12V SOLAR PANELS AND REGULATORS**

**Framed Polycrystalline 30W and 50W SOLAR PANELS. Also available is a 12/24V PWM 20A Regulator.**

30W Solar Panel: IT119 .... **$50**
50W Solar Panel: IT120.... **$80**
20A PWM Regulator ..... **$18**

**7W LED BARS**

IT117 **$5** Ea.
**Pack of 6:**
IT117P.... **$24**

1/2M Long Bars... 36 high output Pure White LED's...
Heat-sinked by the Aluminum Bar... covered by a diffuser strip...
Around 700Lumens at 12V... 0.6A at 12V and 0.75A at 12.6V:

**STEPPER MOTOR ARDUINO-ETC. EDUCATIONAL PACK**

2x small 5V 4-Wire 2-Phase 25mm Stepper Motors
+ 2x Driver modules
+ A 5V Universal regulated plugpack

ALL THIS FOR ONLY.... **$9!!** K416

**CLEARANCE:** *PICK UP ONLY FROM THE CENTRAL COAST*

**54W SOLAR SKYLIGHT KIT**

Includes 3X Custom Made Oyster Lights (350mm Diam) and 1XFS-272 Solar Panel. **$60!**

K401

**CLEARANCE:**

**72W SOLAR SKYLIGHT KIT**

Includes 8X 20W LEDs (45 X 45mm/33V) and 1 x FS-272 Solar Panel **$50!**

*PHONE/EMAIL/CALL FOR A FREIGHT QUOTE* K415

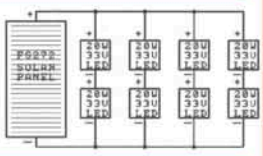

**OATLEY ELECTRONICS**

*PHONE/SMS/EMAIL TO REQUEST A CALLBACK*

www.oatleyelectronics.com

**0428 600 036 branko@oatleyelectronics.com**

# CIRCUIT NOTEBOOK

**Interesting circuit ideas which we have checked but not built and tested. Contributions will be paid for at standard rates. All submissions should include full name, address & phone number.**

## Automatically rebooting NBN modem

I connected to NBN wireless about nine months ago and found that over time, my internet speed slowed down to such an extent that streaming video was no longer possible.

On contacting my ISP, they suggested that I reset the router by removing the power to it for about a minute and then reconnecting it. This I did with the result my internet speed was back to normal and streaming was possible.

After about a week, the same thing happened and resetting the router again fixed the problem. I re-flashed the router with the latest firmware but this made no difference. I then tried a second router with exactly the same result.

As a workaround to solve the problem, I built the circuit shown here which switches off the power to the router for one minute at 3:00am every morning. Since then, I haven't had any further problems with streaming movies. Others may have similar problems and may benefit from building this circuit.

It's designed to be powered up at noon. It will then wait until 3:00am that night, reboot the router and repeat every 24 hours. 9V back-up battery BAT1 keeps the circuit operating during blackouts, so the timekeeping isn't affected.

It uses a 4060 CMOS IC, IC1, which is a 14-stage divide-by-16,384 counter with internal oscillator. The frequency of oscillation is set by 32768Hz watch crystal X1 and when divided by the counter, this gives a 2Hz output pulse on pin 3. This is applied to the GP2 input, pin 5, of PIC12F675 microcontroller IC2.

The positive edge of this pulse triggers an interrupt routine. This routine counts the number of seconds, minutes and hours and resets to zero after 24 hours have passed.

When the time reaches 3:00am, output pin GP0 is driven high for one minute, turning on the transistor Q1 which energises relay RLY1, switching off the router. The circuit runs from the router's 12V DC plugpack.

This voltage is regulated to 5V by REG1, an LP2950-5. Diodes D1 and D2 combine the mains-derived and battery power supplies so that the 12V supply powers the circuit when mains is present and BAT1 powers it during blackouts.

Transistor Q2 is biased on only when the mains-derived 12V power is present. When on, it allows current to flow from LED1's cathode to ground. LED1's anode is driven by a 2Hz signal from the GP1 output of IC2. So LED1 flashes when mains power is present and the circuit is operating correctly.

The firmware for IC2 was written in BASIC and compiled to a HEX file using PICBASIC Pro. Both the BASIC source code and HEX file are available for download from the SILICON CHIP website (free for subscribers).

**Les Kerr,**
**Ashby, NSW. ($50)**

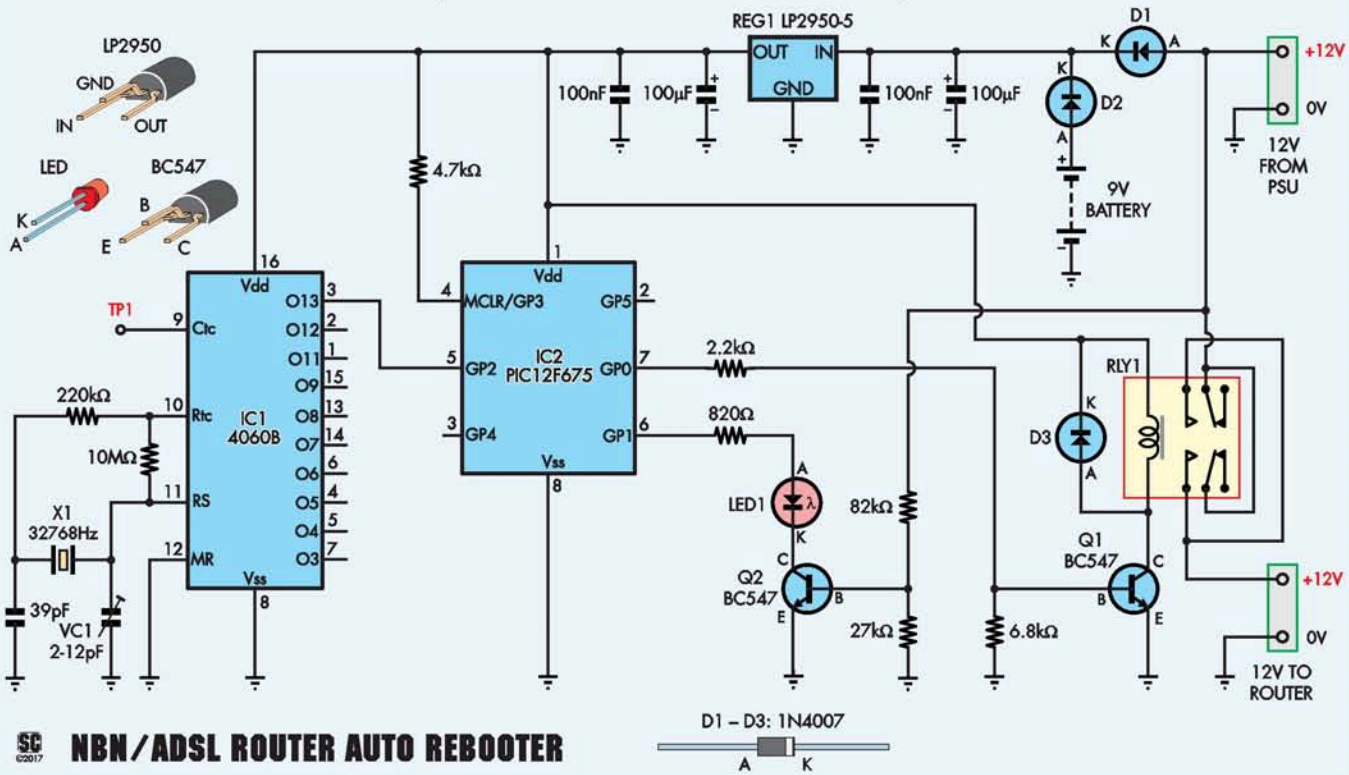


SC ©2017 **NBN/ADSL ROUTER AUTO REBOOTER**

# Using a VL53L0X laser rangefinder module with Arduino

The VL53L0X is, according to ST Micro, the world's smallest time-of-flight laser rangefinder (lidar) IC. It comes in a 4.4 x 2.4 x 1.0mm SMD package, operates off 2.6-3.5V and measures distances up to about 2.4m. It is controlled using an $I^2C$ serial interface. Various small breakout boards with this IC are available on websites like AliExpress and eBay, for less than $10.

This circuit diagram shows a VL53L0X laser range-finding module connected to an Atmel ATmega328P micro which is programmed using the Arduino IDE. This device measures the distance to an object (eg, the top of a body of water) and the local temperature and periodically transmits the results using long-range digital radio to a remote receiver.

The circuit is quite simple, with the microcontroller (IC1) running off 3.3V, derived from a rechargeable battery using a 3.3V linear regulator. The VL53L0X module runs off this same 3.3V supply and its interface to the micro is via SDA (data) to pin 27 (PC4/Arduino A4) and SCL (clock) to pin 28 (PC5/Arduino A5).

The DS18B20 temperature sensor runs off the same supply with its Dallas 1-Wire interface connected to pin 14 of IC1 (PB0/Arduino D8), with the required 4.7kΩ pull-up resistor included. The "LoRa" digital radio module's serial interface is wired up to pins 11 and 12 of IC1 (PD5/PD6; Arduino D5/D6).

Its AUX, M0 and M1 control inputs go to digital pins 4 (PD2/D2), 5 (PD3/D3) and 6 (PD4/D4) respectively. M0 and M1 are also fitted with 3.3kΩ pull-down resistors to set their default states.

The Arduino sketch makes use of the following libraries: SoftwareSerial, Wire, OneWire, Low-Power, DallasTemperature and VL53L0X. SoftwareSerial and Wire are supplied with the Arduino IDE; the others are included in the software download, along with the sketch itself, on the SILICON CHIP website.

Having installed these libraries, using the Sketch → Include Library → Add .ZIP Library menu option, ensure the board selected is Arduino/Genuino Uno and then you can Verify/Compile the sketch. It should complete without errors. You can then upload it to your Arduino.

If you plan on using the bare ATmega328P processor to power the unit, as shown in this circuit diagram, you will need to first install the Arduino 8MHz bootloader onto the chip so that it can run without an external crystal. Details on how to do this are at: **www.arduino.cc/en/Tutorial/ArduinoToBreadboard**

The software sketch is reasonably easy to understand. The setup() routine initialises the input and output pin states, the serial port and the sensors. The loop() function then echoes any data received over the digital radio to the serial console before calling a function to read the data from each sensor, form it into a data packet (a short text string) and then send it over the digital radio.

The unit then powers the radio and sensors down and goes into sleep mode for around 16 seconds before repeating the process. The data can be received on a PC using a second LoRa serial transceiver attached to a USB/serial converter.

**Bera Somnath,**
**Vindhyanagar, India. ($60)**

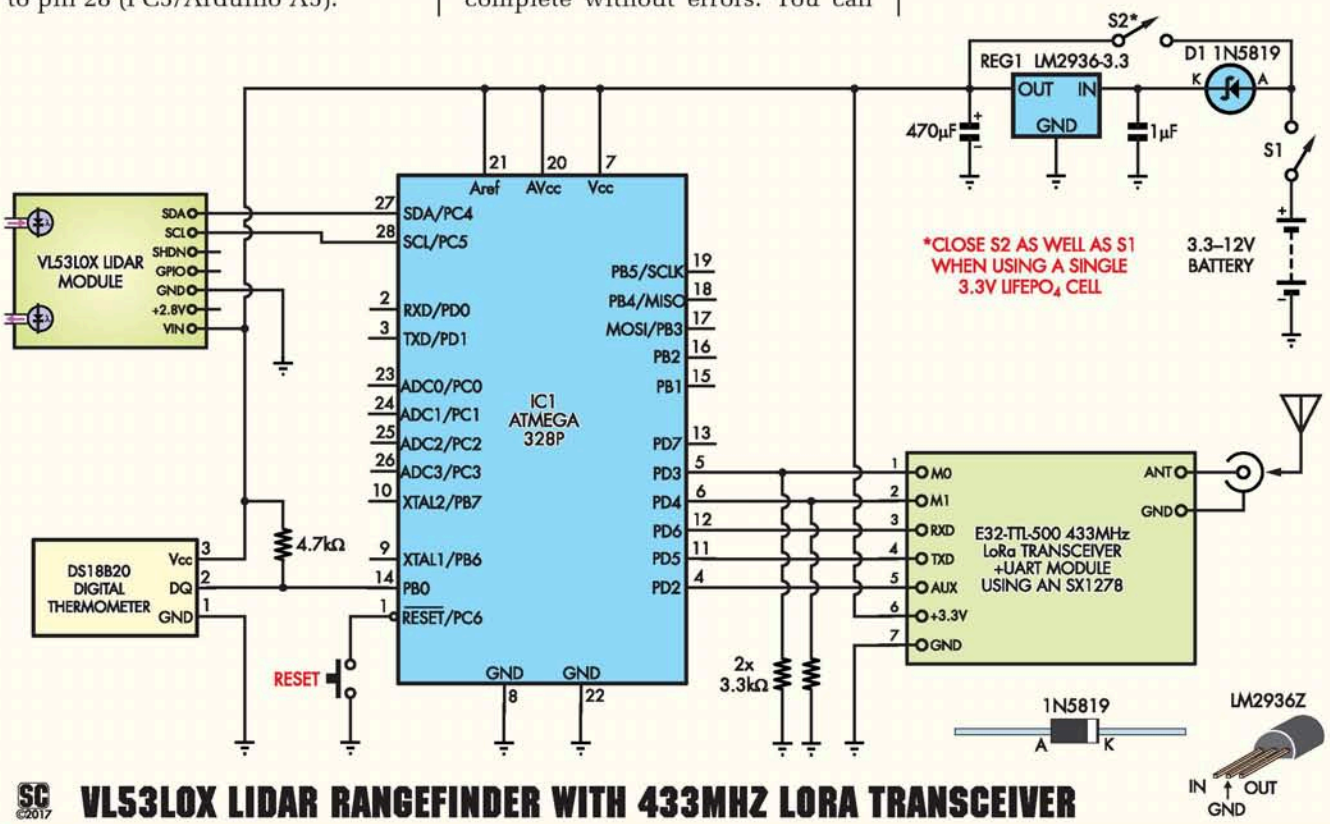


**SC ©2017 VL53L0X LIDAR RANGEFINDER WITH 433MHZ LORA TRANSCEIVER**

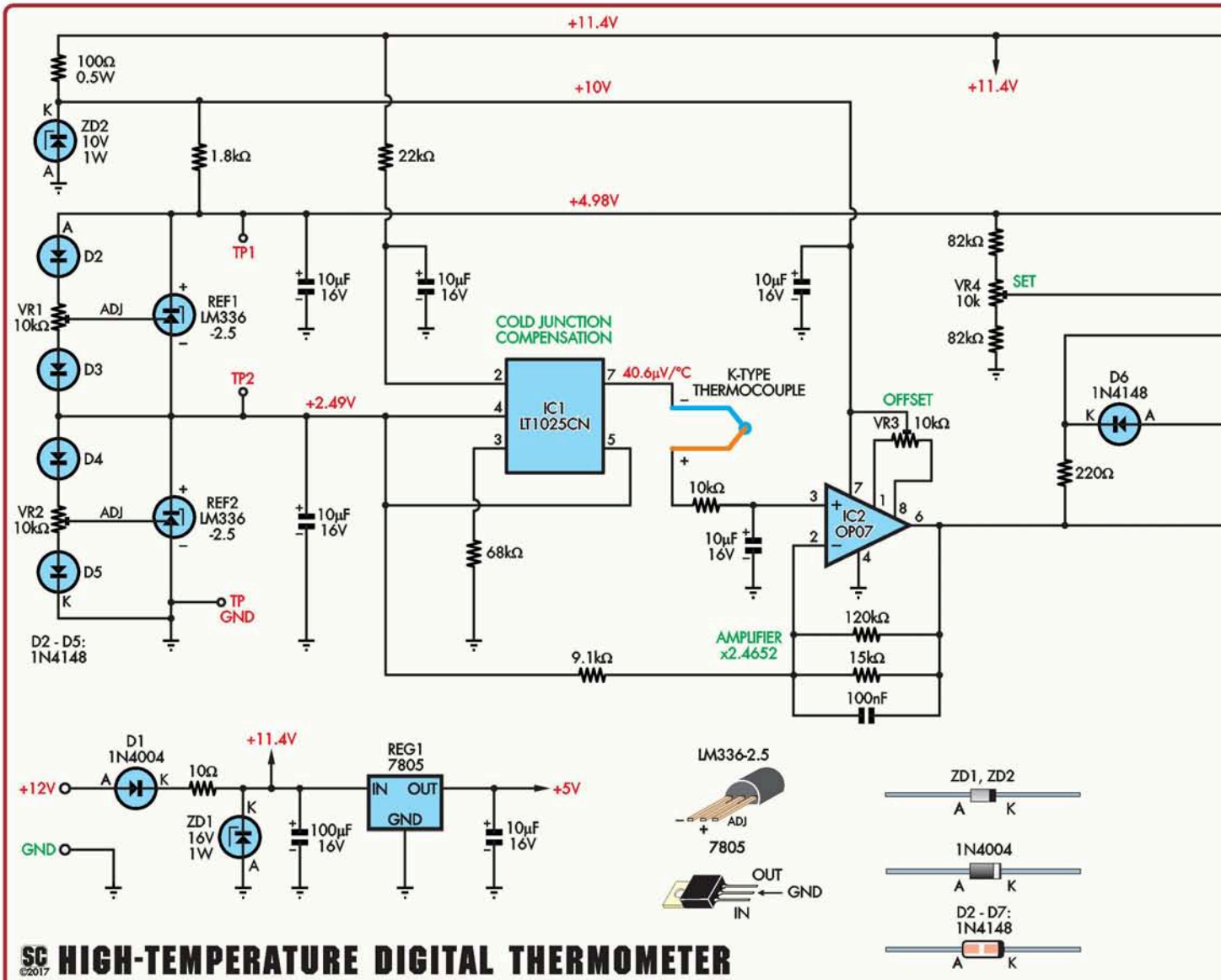


## SC ©2017 HIGH-TEMPERATURE DIGITAL THERMOMETER

# Level shifting the output of the High-Temperature Digital Thermometer

The High Temperature Digital Thermometer, published in Performance Electronics for Cars (www.siliconchip.com.au/Article/8638) and sold as a kit by Jaycar (KC5376), requires a panel meter that has differential inputs.

That is because the output voltage from the thermometer is 2.49V when it is measuring 0°C and this needs to be subtracted from the reading within the meter so it gives the correct display.

With the panel meter that the unit was originally designed for, its INLO (low) input connects to a 2.49V reference voltage and the INHI (high) input connects to the thermometer output.

When the thermometer output is at 2.49V, both the INLO and INHI meter inputs are at the same voltage and the display shows 0 (°C).

The thermometer output ranges from 2.49V up to 2.59V (ie, an increase of 100mV) at 1000°C. So when the thermometer output is 2.59V the panel meter should show 1000.

However, many panel meters available today don't have a differential input and their input ground is shared with the power supply ground.

This means they can only read the input voltage relative to 0V. To use one of these meters in the High-Temperature Digital Thermometer, an additional op amp is required to level shift the output voltage, which is highlighted in the pink-shaded box on this circuit.

Op amp IC4a (half of an LMC6482 dual op amp, IC4a) is used as a differential amplifier (you might find an LT1490A better for low-temperature readings). The two 10kΩ resistors from the centre pin of LK1 (the thermometer output) to ground via the non-inverting input (pin 3) of IC4a form a voltage divider.

The effect is that half the thermometer output voltage is applied to pin 3, ie, when measuring 0°C, the voltage at pin 3 is 2.49V ÷ 2 = 1.245V.

There is also a 10kΩ + 10kΩ divider between the output of IC4a and the 2.49V reference voltage, via pin 2, the inverting input.

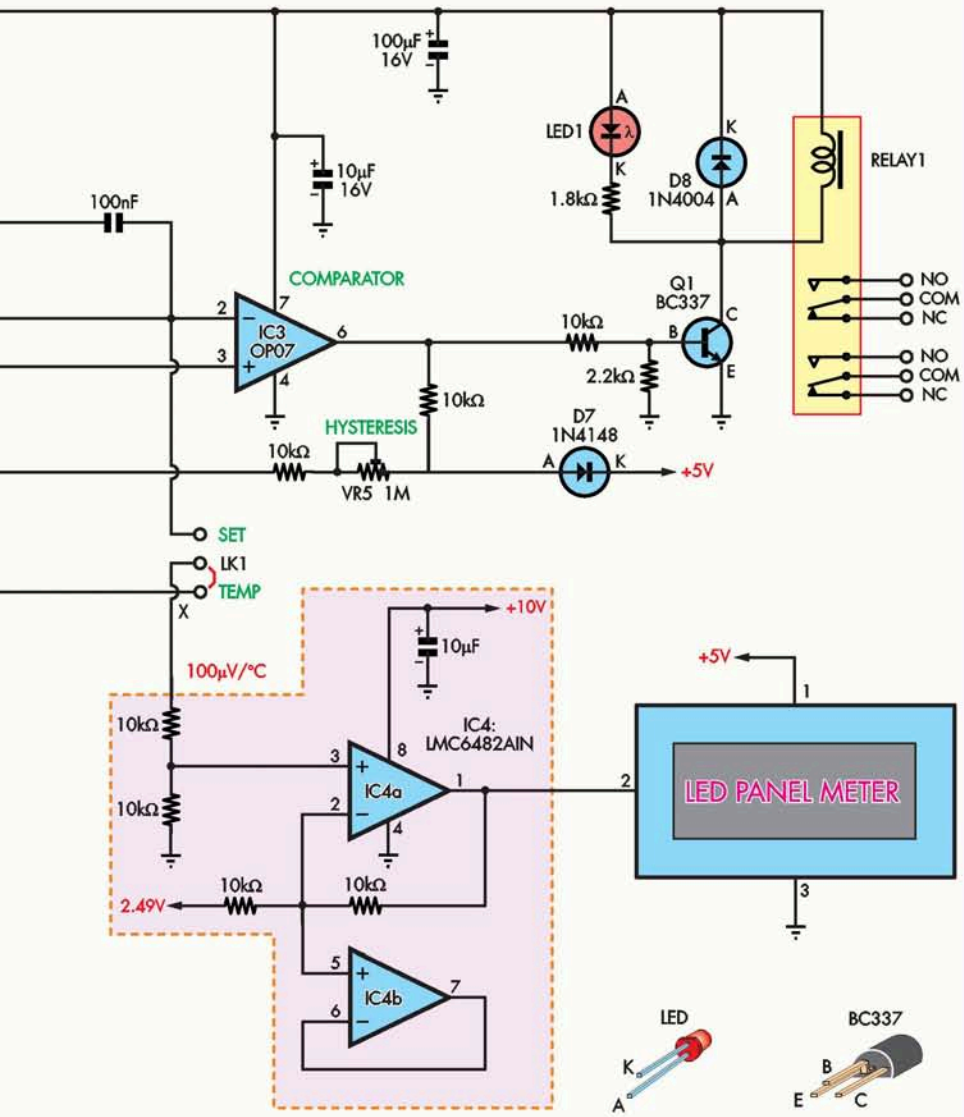


So when the output of IC4a is at 0V, pin 2 is at 2.49V ÷ 2 = 1.245V, ie, the same voltage as at pin 3 when measuring a temperature of 0°C. Since the op amp tries to keep its inputs at the same voltage, this means the output of IC4a (pin 1) is at 0V when measuring 0°C.

As the output of the thermometer rises above 2.49V, the output of IC4a must also rise by the same amount to keep its pin 2 voltage equal to the pin 3 voltage. Thus, it subtracts 2.49V from the thermometer's output voltage. Note that IC4 is a rail-to-rail op amp so the output can swing all the way down to 0V.

You may need to adjust VR3 in the thermometer to counteract the inherent offset voltage due to inaccuracies in IC4. Negative temperatures cannot be shown using this circuit, since it would require a negative supply rail.

If you only want the thermometer to show temperatures up to 200°C, the gain of the thermometer amplifier can be increased to 24.652 so the 40.6µV/°C coefficient of the thermocouple results in 1mV/°C at the output (rather than 0.1mV/°C).

To do this, change the 120kΩ and 15kΩ resistors connected between pins 2 and 6 of IC3 to 620kΩ and 330kΩ respectively.

The right-hand decimal point on the panel meter should then be switched on (usually accomplished by shorting a pair of pads on the back of the panel meter) to give a reading with 0.1°C resolution.

**John Clarke,**
**Silicon Chip.**


# Silicon Chip Binders

**Are your copies of Silicon Chip getting damaged or dog-eared just lying around in a cupboard or on a shelf? Can you quickly find a particular issue that you need to refer to?**

**Keep your copies safe, secure and always available with these handy binders**

These binders will protect your copies of Silicon Chip. They feature heavy-board covers, hold 12 issues & will look great on your bookshelf.

★ 80mm internal width

★ Silicon Chip logo printed in gold-coloured lettering on spine & cover

**Silicon Chip Publications**
**PO Box 139**
**Collaroy Beach 2097**

Order online from www.siliconchip.com.au/Shop/4 or call (02) 9939 3295 and quote your credit card number. **See website for overseas prices.*

ElectroneX
electronics design & assembly expo

| | |
|---|---|
| ADM Instrument Engineering | B22 |
| Alfatron | A5 |
| Altronics Distributors | A8 |
| ANRITSU | B1 |
| Amphenol* | A8 |
| APM* | C12 |
| ASSCON* | A11 |
| Atten* | A8 |
| Autotronik* | A11 |
| Chemtools | B37 |
| Congatec Australia | A1 |
| Control Devices Australia | A19 |
| Curiosity Technology* | B22 |
| Dataforth* | C12 |
| Deutsch* | A8 |
| Delta Gamma RF Expert | A4 |
| Digilent Inc*, | B10 |
| Dinkle* | A8 |
| Duet Electronics | C3 |
| DLPC | B14 |
| Electro Harmonix* | A8 |
| Electrolube | B15 |
| Element 14 | C17 |
| Embedded Logic Solutions | C30 |
| Emona Instruments | A23 |
| Entech Electronics | B35 |
| Erntec | B6 |
| ESI Technology Ltd* | B22 |
| Europlacer | B34 |
| Eurotherm* | B22 |
| ExtraEye FAI* | B29 |
| Fairmont Marketing | B14 |
| Figaro Gas Sensors Australia | C38 |
| Fine-Mark Design | C36 |
| Fluke* | B29 |
| FS Bondtech* | B29 |
| Fuseco | C42 |
| GLW* | A11 |
| Glyn Ltd | A16 |
| GPC Electronics | B5 |
| Hakko Australia* | B15 |
| Hakko New Zealand* | B15 |
| Hammond Electronics | A30 |
| Hawker Richardson | A24 |
| Helios Power Solutions | C16 |
| Henchman Products | A7 |
| Hetech | C23 |
| HK Wentworth | B15 |
| HW Technologies | B12 |
| IMP Electronic Solutions | C2 |
| JBC* | B34 |
| JS Electronics | C15 |
| Juki* | A11 |
| Keysight Technologies | A12 |
| Kobot Systems | A6 |
| Kolb* | A11 |
| Komax WIRE* | A11 |
| Kulicke & Soffa* | B29 |
| Leach (SZ) Co Ltd | B40 |
| Leap Australia | C20 |
| Lelon* | A8 |
| Lintek | B39 |
| LPKF Laser & Electronics* | C30 |
| Lutron* | B22 |

*Denotes - Co-Exhibitor Company/Brand Represented by Exhibitor

electronex.com.au

# ElectroneX

electronics design & assembly expo

## Melbourne Park Function Centre
## 6-7 September 2017

**Australia's only** dedicated trade event for the electronics industry returns to Melbourne in September.

Electronex is being held from 6 – 7 September at the Melbourne Park Function Centre in Batman Avenue, Melbourne (between the MCG and Rod Laver Arena).

With over 90 exhibitors and a technical conference plus free seminars featuring leading international and local industry experts, this is a "must see" event for decision makers, enthusiasts and engineers designing or working with electronics.

Attendees can pre-register at no charge at www.electronex.com.au

This year's event will feature a host of new product releases and continues to reflect the move towards niche and specialised manufacturing applications in the electronics sector as well as the increased demand for contract manufacturing solutions.

There are around 20 new companies at the Melbourne event which reflects the growth from local manufacturers for specialist applications that recognise the expertise and quality that is available from Australian based suppliers.

Last years's event in Sydney attracted over 1200 electronics design professionals including electronic and electrical engineers, technicians and management; along with OEM, scientific, IT and communications professionals, defence, government and service technicians.

Electronex was launched in 2010 to provide professionals across an array of industry sectors with the opportunity to learn about the latest technology

developments for systems integration, design and production electronics.

The SMCBA Electronics Design & Manufacture Conference (founded in 1988) brings together local and international speakers to share information critical to the successful design and development of leading-edge electronic products and systems engineering solutions.

## Free seminars

A series of free seminars with overviews on key industry topics will also be held on the show floor throughout the two day event and the program can be viewed on the show website.

This year's conference program comprises six main workshops to be conducted by internationally renowned speakers Vern Solberg and Phil Zarrow, and a series of training and certification courses.

The Conference offers engineers, designers, technicians and managers the opportunity to hear from our international experts and includes the following topics:

- **Best Practices for Improving Manufacturing Productivity** – Phil Zarrow,
- **Flexible and Rigid Flex Circuits - Design, Assembly and Quality Assessment** – Vern Solberg
- **The "Deadly Sins" of SMT Assembly** – Phil Zarrow,
- **Embedding Passive and Active Components: PCB Design and Assembly Process Fundamentals** - Vern Solberg
- **Implementing Advanced "Leading Edge" and "Bleeding Edge" SMT Component Technology** – Phil Zarrow
- **Design and Assembly Process Implementation for Flip-Chip, Wafer Level and 3D Semiconductor Package Technologies** – Vern Solberg

## Training/Certification

People involved in electronics manufacturing can enrol to be trained and certified in a range of IPC programs by two of the SMCBA Master IPC Trainers Ken Galvin and Mike Ross:

- **ESD Control for Electronics Assembly**
- **Handling Moisture Sensitive Devices**
- **Foreign Object Debris (FOD) Prevention in Electronics Assembly**
- **Stockroom Materials – Storage and Distribution.**

Full Conference details can be seen at www.smcba.asn.au/conference or contact Andrew Pollock at the SMCBA on (03) 9571 2200.

For further information on Electronex 2017, call Noel Gray at Australasian Exhibitions and Events Pty Ltd on (03) 9676 2133.

## Electronex – Connecting the Electronics Industry

ElectroneX
electronics design & assembly expo

| | |
|---|---|
| Machinery Forum | C22 |
| Marque Magnetics Ltd | A20 |
| Mastercut Technologies | C18 |
| Mean Well* | B22 |
| Mektronics | B18 |
| MTrical | B33 |
| Micron* | A8 |
| Midori* | B22 |
| Mornsun | B14 |
| National Instruments | B10 |
| Neutrik* | A8 |
| OKW* | B11 |
| ONboard Solutions | B29 |
| On-Track Technology | B17 |
| Oritech | B34 |
| Oupiin* | A8 |
| Outerspace Design | C7 |
| Peel Instruments | C38 |
| Pentair | B7 |
| Pillarhouse Soldering* | B29 |
| Powertran* | A8 |
| Precision Electronic Technologies | C28 |
| Pros kit* | A8 |
| QualiEco Circuits | A15 |
| Radytronic* | A8 |
| Reid Industrial Graphic Products | C14 |
| Re-Surface Technologies | A24 |
| Rigol Technologies* | A23 |
| Ritec* | A8 |
| Rohde & Schwarz (Australia) | B30 |
| ROLEC OKW Australia New Zealand | B11 |
| Salecom* | A8 |
| Scientific Devices Australia | C12 |
| Semikron | A27 |
| Silcon Chip Publications | C41 |
| SJ Innotech* | B29 |
| Stanford Research* | C12 |
| Suba Engineering | D11 |
| Successful Endeavours | C1 |
| Sun Industries | C40 |
| Sunon* | A8 |
| Surface Mount & Circuit Board Association | |
| Tagarno* | A11 |
| Tarapath | C4 |
| TecHome* | C23 |
| Tech Rentals | C5 |
| Teledyne Lecroy* | C12 |
| Telit Wireless Solutions | A16 |
| The Bright Group | B16 |
| Thermo Fisher* | B22 |
| ThinkRF* | C12 |
| Tomco Technologies | C9 |
| Transmille* | C12 |
| Trio Test & Measurement | A12 |
| UniMeasure* | B22 |
| VGL Allied Connectors | B2 |
| Vicom Australia | B26 |
| Wago | A26 |
| WDT ToolTech* | A11 |
| WURTH Elektronic | B28 |
| Xiamen Jiansen Electronics | C15 |

*Denotes - Co-Exhibitor Company/Brand Represented by Exhibitor

electronex.com.au

# GET CREATIVE, GET CONNECTED, GET CODING.

## An educational platform that's ideal for learning to code and getting started with embedded computing.

BBC micro:bit combines a pocket-sized coding device featuring several sensors and LEDs, with a website full of coding languages, helping you get creative – from making your own games to taking selfies, the possibilities are endless. Each element is completely programmable via easy-to-use software on a dedicated website that can be accessed from a PC, tablet, or mobile.

**Featuring**

- 32-bit ARM Cortex-M0 Processor
- 5x5 LED matrix
- Bluetooth Low Energy (BLE)
- Accelerometer and compass
- 20 pin edge connector
- 2 programmable buttons
- 3 digital/analog GPIOs
- Micro USB
- AAA battery connector
- Multiple online programmable platforms

element14

**au.element14.com/bbc-microbit I 1300 361 005**

BBC micro:bit

ElectroneX
electronics design & assembly expo

DEK®

LPKF
Laser & Electronics

New Stencil Laser
Increased Capability
Faster lead times

Australian Made
DEK and LPKF
Solder Paste Stencils

*DEK VectorGuard stencils, now manufactured in Australia by Mastercut.*

**DEK VectorGuard | LPKF ZelFlex | Standard Mesh Mounted**

*Reduce the overall cost of your stencils and simplify your stencil storage with a proven, reusable framing system. Frames for almost any stencil can be provided.*

***Benefits ...***

- *Superior tensioning*
- *Reduces storage*
- *Reduces shipping*
- *Environmentally friendly*
- *Over 20 years experience*
- *Super LPKF accuracy*
- *Fast turnaround*
- *Australian made stencils*

*(07) 5576 1900*
*info@mastercut.com.au*

*www.mastercut.com.au*

mastercut technologies
Your thin metal experts

## New Rigol 4GHz Oscilloscope at Electronex 2017

Emona Instruments, a leading supplier of electronic test and measuring instruments is exhibiting at Electronex 2017 at Stand A23.

Recently RIGOL Technologies announced the release of their Phoenix Oscilloscope chipset. This allows Rigol to bring their unique price performance value proposition to a new class of customers needing advanced instrument performance and application support.

To celebrate the release of the new chipset, Emona will be displaying Rigol's new high performance oscilloscope with 4GHz Bandwidth, 20GSa/sec real time sample rate and 1 billion point memory depth.

Visit www.emona.com.au/rigol

EMONA

## Pi Desktop – see it at element14 stand C17

Pi Desktop, from element14, is a set of Pi accessories which can convert Raspberry Pi 1/2/3 to a real computer. The accessories include a cap board and an attractive box. The user can plug the cap board into the 40-pin I/O connector of Pi, install a high capacity Solid State Drive (SSD) on the cap board and put Pi and cap board into the box. It becomes a real computer which has all of features of PC, such as ethernet, WiFi, Bluetooth, hard disk and real time clock. Users can link the Pi Desktop to a display through HDMI interface.

Key Features:

- Intelligent and safe power controller – users don't have to remove the power adapter from Pi board, they just simply push a button to turn the power on or off like a desktop or laptop
- SSD expansion – It allows users to install a mSATA SSD (up to 1TB) onto the Raspberry Pi.
- RTC – Real Time Clock will provide independent time for any application on the Pi.
- A heatsink – it will cool down the Pi CPU.
- A beautiful enclosure – protect the Pi Board and convert a PCBA into a real electronics product.

You can find element14 and the Pi Desktop on stand C17 at this year's Electronex expo.

## 24 Hours Turnaround – The fastest PCB assembly service launched by QualiEco Circuits

QualiEco Circuits has recently launched a 24 hours turnaround service for PCB assembly using their in-house facility. Overnight delivery to all major cities of Australia is now possible once PCB, components and stencil is ready for assembly. The company is already offering express turnaround for PCB manufacturing from their off-shore plant.

The team at QualiEco Circuits Pty Ltd is well-known for providing excellent quality electronic manufacturing services and solutions.

The company offers express services in all product categories. Their customers have been enjoying excellent quality, low prices and on-time delivery for years. The company has various customised delivery solutions for all customers at affordable prices. Customers can choose from the fastest to semi-fast and normal delivery options based on their budget and urgency.

QualiEco Circuits bagged two prestigious awards this year – Gallagher Fuel System's Supplier of The Year 2017 and Elite Supplier of The Year 2017. This vibrant, growing company offers outstanding technical support and attention to detail. Proud of providing reliable services for more than 14 years, QualiEco Circuits is currently a market leader in New Zealand.

The company is now enjoying a successful sixth year of operation in Australia.

**ELECTRONEX STAND A15**

**Complete solution in specialised PCBs – Give wings to your imagination!**

**Rigid PCBs**
(Up to 32 layers)

**Flexible PCBs**
(Single and Multilayer)

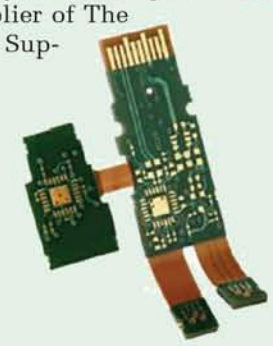

**Rigid-Flexible PCBs**
(Single and Multilayer)

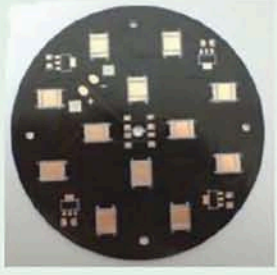

**Metal Core PCB**
(Single and Multilayer)

## Ultra-Low Cost InfiniiVision 1000 X-Series Oscilloscopes from Keysight

Keysight Technologies will show their InfiniiVision 1000 X-Series oscilloscopes at Electronex.

With a starting price of AUD$637, there are 50 and 100MHz models.

- Ideal for students and new scope users
- Includes an educator's resource kit with built-in training signals and comes standard with a comprehensive oscilloscope lab guide at no additional cost
- 6-in-1 instrument integration including a feature unique to Keysight – built-in frequency response analyser with Bode plotting

The 1000 X-Series uses Keysight's MegaZoom IV custom ASIC technology, which enables a high 50,000 waveforms per second update rate. This makes it easier to see random and infrequent glitches and anomalies. The 1000 X-Series also has a high sampling rate of up to 2GSa/s and comes standard with two probes.

Information about the InfiniiVision 1000 X-Series oscilloscopes is available at www.keysight.com/find/1000X-Seriesinfo

Or visit the Keysight Technologies stand (A12) At Electronex Melbourne and experience the InfiniiVison 1000 X-Series for yourself!

## New Electrolube resins on display at the HK Wentworth Stand (B15)

Electrolube, distributed in Australia by HK Wentworth, will showcase some specialist encapsulation resin systems and thermal management materials for Australia's LED manufacturers at this year's Electronex (stand B15).

New products on show will include ER2224, which provides high thermal conductivity and excellent thermal cycling performance, making it ideal for use in LED lighting units where it helps to promote heat dissipation and prolong unit service life.

The thermally conductive epoxy resin system offers an improved method of cure and subsequent health and safety benefits for the user.

The tough new UR5638 polyurethane resin provides a clear, transparent finish and is a low exothermic resin, making it ideal for LED applications involving the encapsulation of larger LED lighting units.

As an aliphatic polymer, the resin also offers superior UV stability as well as excellent transmission of visible light, making it an excellent resin for white light LEDs.

ELECTROLUBE
THE SOLUTIONS PEOPLE

APEM

PANEL SWITCHES | PCB SWITCHES | INDICATORS | JOYSTICKS | KEYBOARDS

APEM offers the **broadest range** of **quality HMI products** in the industry. With exciting **new products** released each month, APEM's **large portfolio** of switches, joysticks, indicators and keypads tailor to several **markets**.

Control Devices

Joysticks • Control Grips • Sensors • Encoders • Custom Electronics • Switches

Unit 17, 69 O'Riordan Street, Alexandria 2015 NSW, AUSTRALIA T: +61 2 9330 1700,
F: +61 2 8338 9001, Freecall 1800 266 876, **sales@controldevices.net** • **www.controldevices.net**

# RTB2000 Entry-level Oscillscope from R&S

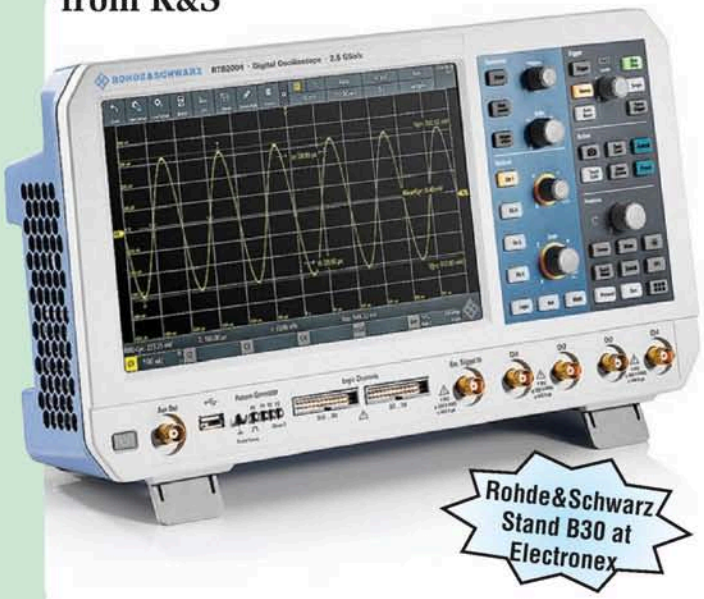


At Electronex 2017, Rohde & Schwarz premieres its new R&S RTB2000 entry-level oscilloscope for education, R&D and manufacturing.

Rohde & Schwarz broadens its growing oscilloscope portfolio with the RTB2000, the first low cost oscilloscope to offer touchscreen operation as well as 10-bit vertical resolution, providing R&S quality at an extremely competitive price.

Power of ten (10-bit ADC, 10 Msample memory and 10.1" touchscreen) combined with smart operating concepts make the R&S RTB2000 digital oscilloscope the perfect tool for university and laboratories, for troubleshooting embedded designs during development and for production and service departments.

**Key Facts:**

- 70MHz to 300MHz
- 10-bit ADC
- 10 Msample standard memory
- 10.1" capacitive touchscreen

You can experience the R&S RTB2000 along with other quality oscilloscopes from the Rohde&Schwarz range at their stand (B30) at this year's Electronex Expo.

ELECTROLUBE
THE SOLUTIONS PEOPLE

Where experience and innovation come together.

In the formulation, manufacture and global supply of conformal coatings, thermal pastes, encapsulants, cleaners and lubricants, we have the solutions of the future. Our ethos of collaboration and research, combined with a truly global presence and manufacturing capability has led to the development of ISO standard, environmentally friendly products for the world's leading industrial and domestic manufacturers.

Our unique provision of the complete solution, combined with the scale and scope of our capabilities ensures a reliable supply chain, and exemplary service.

Find out how you could become part of the solution. Simply call or visit our website.

ElectroneX
electronics design & assembly expo
Stand B15
+61 (0) 2 9938 1566
www.electrolube.com.au

HAKKO
Approved Distributor
Australia / New Zealand
www.hakkoaustralia.com.au

Electronic & General Purpose Cleaning | Conformal Coatings | Encapsulation Resins | Thermal Management Solutions | Contact Lubricants | Maintenance & Service Aids

A division of H K Wentworth PTY Ltd. (Australaisa)
Unit 3/98 Old Pittwater Road, Brookvale NSW 2100,

Mektronics
Australia Pty Ltd

Mektronics is Australia's leading supplier of quality tools and equipment. We proudly represent and support many of the world's premium brands.

With over 35 years of experience within the industry our sales team have unsurpassed industry and product knowledge and are happy to assist with any queries you may have.

Mektronics are on Stand B18 at Electronex.

# Australian Stencils from Mastercut Technologies

## Electronex Stand C18

Mastercut Technologies have confirmed their confidence in the Australasian electronics industry with the purchase of a new stencil laser. This new generation fibre laser by LPKF in Germany is now up and running, producing stencils for customers throughout Australia and New Zealand.

Mastercut's Director of Marketing, Bill Dennis says "we looked around the world for the best stencil laser we could find. Happily, that turned out to be the G6080 from LPKF, the manufacturer of our original laser. This investment means we can produce faster, cleaner and more accurate stencils than ever before."

The performance of the new machine has been confirmed with high speed and repeatable accuracy of around 2µm. Dennis says "this is ability surpasses any current fine-pitch requirements both now and well into the future."

The machine can handle all stencil types including shim only, standard meshed, Zelflex and DEK Vectorguard. An interesting new feature is its ability to produce oversize stencils up to 1.8m long (1.6m print area) which is ideal for LED lighting manufacturers.

Mastercut will be exhibiting again at Electronex in Melbourne (Stand C18).

Mektronics Australia Pty Ltd

# Focus

**Discount Code: ELECTRONEX17**

## Fluke: 117/323 Electrician's Combo Kit (FLU117/323)

This Electrician's Multimeter combo kit pairs the Fluke 117 DMM with a Fluke 323 clamp meter for productive and effective troubleshooting in one total solution, including the C115 durable soft carrying case for protection and easy meter transportation.

List Price $480
**$399** +GST

## Hakko: FX888 Digital Soldering Station

(HFX888D-21BY)

**Digital model in an analog-model price bracket**

Features adjustment mode, preset mode, and password function. Separable tip/heater design provides excellent value for money.

- Excellent thermal recovery
- Simple and easy to operate
- Small footprint
- Password function and preset mode

List Price $217.19
**$159.50** +GST

## HDMI HD Digital Video Microscope (L010185)

- A true working distance: 4cm - 15cm
- Real time imagery, no lag or latency
- 300 times magnification, 1920x1080P, 30fps and high quality non-interpolate large CMOS sensor
- 4× digital zoom
- Inbuilt LCD 960*240 resolution
- Inbuilt dual lights to help illuminate your target object

List Price $790
**$479** +GST

## PanaVise: 324 Electronic Work Centre (PV324)

Makes your work areas more efficient and manageable. This complete package creates an economical work station with everything right at your fingertips.

- Single control knob and exclusive "split-ball" lock the Circuit Board Holder firmly into place
- Release the knob pressure and Circuit Board Holder tilts 90°, turns 360° & rotates 360° and can be easily removed from the base.

List Price $132.95
**$99** +GST

## Naturalight: 5" Magnifying Lamp (DAYAN1020)

Slim design for improved viewing area. Less material between you and your work means more clarity and efficiency.

- High quality 13cm (5") lens for detailed work (1.75X)
- 22W naturalight™ tube (energy saving)
- Supplied with tube, table clamp and lens cover

List Price $111.25
**$89** +GST

## Steinel: HL 1620 S Hot Air Gun (STEHL1620S)

**The All Rounder**

The two-speed HL 1620 S hot air tool soon becomes indispensable.

- Optimised centre of gravity for fatigue-free working with one hand
- For all standard nozzles (apart from reduction nozzles)
- Integrated thermal cut-out to prevent overheating
- Impressive 1600 watts of power, airflow rate adjustable to two settings (240/450 l/min)

List Price $97
**$66.90** +GST

## Mat Kit for Bench (A010484)

Everything you need to quickly and efficiently set up a bench for ESD work.

- 600mm x 1.8m matting, grey
- Snap stud, 10mm
- Wrist strap and cord
- Dome top ground cord
- Clipsal plug
- Dual under bench mount

List Price $145.86
**$109** +GST

## CK: Ecotronic Cutters, Pliers & Wire Strippers

- Special tool steel, hardened for long-term cutting performance
- Elecro-static discharging handles - dissipative $10^8$

| Part # | Description | List Price | Focus Price* |
|---|---|---|---|
| CKT3883 | Micro Side Cutter | $18.80 | $14.90 |
| CKT3886 | Slim, Relieved Side Cutter | $19.41 | $15.40 |
| CKT3889 | Long Snipe Nose Plier | $18.68 | $14.90 |
| CKT3891 | Flat Nose Plier | $18.68 | $14.90 |
| CKT3893 | Wire Stripper Pliers, 0.2-0.8mm | $25.34 | $18.90 |
| CKT3894 | Wire Stripper Pliers, 0.4-1.3mm | $25.05 | $18.90 |

• Prices in Australian Dollars • Prices quoted exclude GST • Valid until 30 September 2017 or while stocks last • Images are for illustrative purposes only • E&OE • * +GST

**Quality Tools for Industry**

**Sydney (Head Office)**

Unit 3, 8 Bonz Place, Seven Hills NSW 2147
PO Box 606, Seven Hills NSW 1730

ph: 1300 788 701 | fax: 1300 722 004 | e: sales@mektronics.com.au | www.mektronics.com.au

## Here's a switch . . . from Control Devices

Founded in 1997, Control Devices is Australasia's leading supplier of industrial, defence, broadcasting and recording components and are proud to support the world's quality engineering products.

Their key objectives are to provide a quality product and customer satisfaction, with a cost effective service.

Among the many new and interesting products that Control Devices will have on their stand at Electronex (Stand A19) is a new range of "PBA" 30mm pushbutton piezo sealed switches from APM.

With their large actuation surface, the new series is in line with the AV 30mm and FP 40mm series.

Exclusively available on PBA 30 mm models, the prominent ring option increases the visibility of this piezo switch. It is available in single color, bi-color and tri-color versions.

The 30mm actuation surface improves user comfort and ensures better switch visibility, while the piezo technology ensures very long life (50 million cycles) making it ideal for applications where reliability is key.

Because the switches are totally sealed (IP68 and IP69K) they are perfectly suited to humid applications (eg, yachting, spa, swimming pools, etc) and for sectors requiring a regular cleaning of control surfaces (eg, medical and food industries).

Available in flush or prominent, translucent or coloured, the illuminated ring is available in single colour, bi-colour and tri-colour versions.

Control Devices will be delighted to discuss your particular switch, sensor, control and other electronics requirements at Stand A19 at Electronex 2017.

## Rolec OKW has a new range of "different" cases . . .

The new BODY-CASE is the latest product series in the range of wearable enclosures by OKW Gehäusesysteme and is perfect for applications on or near the body.

Thanks to its small, compact format, it is perfect for wearing on the body: on your arm, around your neck, in shirt and trouser pockets or carried loose in an article of clothing.

The body case has a three-part design consisting of a top and a bottom part and a matt TPE sealing ring. The enclosures are made of ASA material in the colour traffic white and have a modern appearance thanks to highly polished surfaces. The top parts are available from stock, either with or without a recessed surface for decor foils or membrane keyboards. The sealing ring, available in vermilion and lava (similar to anthracite) colours allows protection classes IP65 and IP67. The dimensions of the enclosure are 54 x 45 x 17.5 mm (L x W x D). Possible applications include mobile data recording and data transmission, measuring and control engineering, digital communications technology, emergency call and notification systems as well as bio-feedback sensors in the fields of health care, medical technology, leisure and sports etc.

OKW enclosures can be customised on request, modification services include CNC milling and drilling, digital or screen printing of legends and logos, special finishes, EMC shielding, keypads and labels, all modifications are carried out by the in-house service centre.

Rolec-OKW will demonstrate the BODY-CASE and various other cases at Electronex 2017 Stand B11.

# Power of ten

## Get in touch with the new R&S®RTB2000 series oscilloscopes.

R&S®RTB2000 oscilloscopes (70 MHz to 300 MHz) team top technology with top quality. They surpass all other oscilloscopes in their class, delivering more power plus intuitive usability at a convincing price.

For more information visit
www.scope-of-the-art.com

sales.australia@rohde-schwarz.com

Visit our stand number B30
at Electronex Melbourne

ROHDE&SCHWARZ

# The Keysight Bench

## The bench tools your budget will love

## The deepest bench in the industry

www.keysight.com

KEYSIGHT TECHNOLOGIES

Prototype to High Volume
ONE STOP SHOP

Visit us at ElectroneX Stand

A15

6-7 September, 2017
Melbourne

# QualiEco Circuits Pty Ltd.

## Proudly serving Australasia Since 2003

- Rigid & Flexible PCBs
- Contract Assembly

## PCB Assembly from 24 Hrs.

Fastest lead time in Australasia

PCB Manufacturing from 24 Hrs. - Ex-factory Offshore
PCB Assembly from 24 Hrs. - Ex-factory In-house

## We make a difference

GALLAGHER Fuel Systems Ltd. SUPPLIER OF THE YEAR 2017

Pb ISO UL

$ Cheapest Price  24 x 7 Support

**1300 BUY PCB**
(1300 289 722)

**+61 3 9111 1887**

pcb@qualiecocircuits.com.au
www.qualiecocircuits.com.au

One of the proud sponsors of

ElectroneX electronics design & assembly expo

SMCBA SURFACE MOUNT & CIRCUIT BOARD ASSOCIATION • MEMBER •

# ElectroneX

## electronics design & assembly expo

# Design, Develop, Manufacture with the latest Solutions!

**Showcasing new innovations and technology in electronics**

In the fast paced world of electronics you need to see, test and compare the latest equipment, products and solutions in manufacture and systems development.

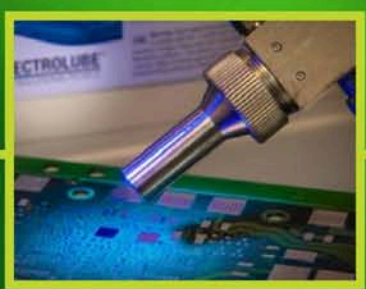

### Make New Connections

- Over 90 companies with the latest ideas and innovations
- New product, system & component technology releases at the show
- Australia's largest dedicated electronics industry event
- New technologies to improve design and manufacturing performance
- Meet all the experts with local supply solutions
- Attend FREE Seminars

### Knowledge is Power

SMCBA CONFERENCE

The Electronics Design and Manufacturing Conference delivers the latest critical information for design and assembly. Local and International presenters will present the latest innovations and solutions at this year's conference.

**Details at www.smcba.com.au**

**Free Registration online!**
**www.electronex.com.au**

In Association with SMCBA ELECTRONICS DESIGN & MANUFACTURE CONFERENCE

Supporting Publication SILICON CHIP

Organised by AEE AUSTRALASIAN EXHIBITIONS & EVENTS PTY LTD

**Melbourne Park Function Centre 6-7 September 2017**

# YOUNG MAKER FUN!

## SHARE YOUR LOVE OF ELECTRONICS WITH YOUR KIDS!

Jaycar Electronics

## LEARN TO CODE

Friendly, easy-to-use robots to learn about electronics, programming and robotics. Hours of fun and a great way to teach "young engineers" about science, technology, engineering and mathematics (STEM). Visit our website to see videos on how engaging these robots really are.

### MEET EDISON KR-9210

NEW 2017

A compact, pre-assembled robot that is built to last. Pre-programmed with 6 robot activities set by barcodes, can be programmed using simple drag-and-drop programming blocks or a Python-like written language. Modular and easily expandable using LEGO® bricks. Ages 5+.

**$99.95**

Edison

### INTRODUCING MBOT KR-9200

NEW 2017

An easy-to-assemble, entry-level robot that can avoid obstacles, follow lines, play soccer, and more. Control from your Smartphone or Tablet using the freely available app, or program using simple drag-and-drop programming blocks or Arduino® IDE. Ages 12+.

**$199**

Makeblock Construct Your Dreams Bluetooth

## DRAW CIRCUITS

NEW 2017 ONLY $69.95

### BASIC KIT KJ-9340

Contains a Circuit Scribe pen, six modules, battery, workbook and accessories to get started. Explore basic circuit concepts like conductivity and work up to creating a touch-sensitive circuit using the NPN transistor. 11pc.

### LEARN ABOUT ...BASIC ELECTRONICS WITH CircuitScribe

There's now a new way to teach kids the fundamentals of electronics. Like the name suggests, kids can draw the circuits with the conductive pen and then watch them come to life. Each kit includes a detailed sketchbook with examples and templates to work through, as well as magnetic modules, LEDs and components. The modules magnetically attach using the steel sheet that goes behind the paper. Visit our website for videos and full list of contents.

**LEARN MORE AT:**
www.jaycar.com.au/stem

NEW 2017 ONLY $149

ONLY $119 NEW 2017

### MAKER KIT KJ-9310

17 piece kit to take your circuit sketches to the next level with inputs, outputs, and signal processing in your circuits.

### ULTIMATE KIT KJ-9300

32 piece kit for more complex, robust circuits, which you can hook up to programmable platforms like Arduino® (Arduino® not included).

### TEACH YOUR KIDS ELECTRONICS WITH LITTLEBITS

NEW 2017

A clever range of kits to help educate and inspire kids (and yourself) about electronics and programming. Each littleBits kit has easy-to-use colour-coded building blocks, with step-by-step instructions.

**RULE YOUR ROOM KIT**
KJ-9120 **$199**

**GIZMOS AND GADGETS KIT**
KJ-9100 **$389**

**FROM $199**

NEW 2017

**$49.95**

### CIRCUIT STICKERS STEM STARTER PACK KJ-9330

Uses copper tape with component stickers to allow kids to merge art and electronics. Includes copper tape, batteries, LEDs and heaps of templates and exercises, including circuits, switches. Even the box can be turned into a project!

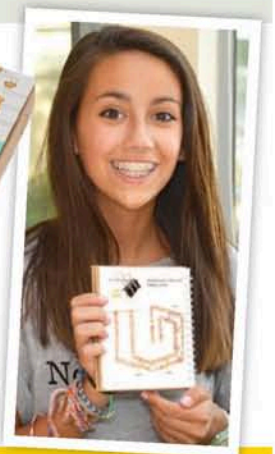

**SEE ALL OF OUR STEM RANGE AT jaycar.com.au/stem**

# LEARN THE ARDUINO® BASICS

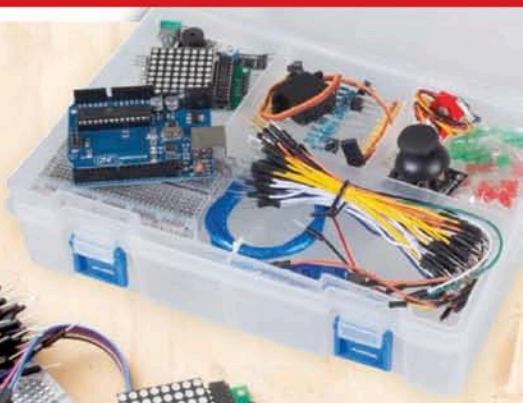

Includes handy storage case!

## ALL-IN-ONE LEARNING KIT XC-3900 WAS $79.95

This starter kit includes the UNO main board, breadboard, servo motor, light sensor, RGB LED, joystick, buzzer, LED matrix, line tracer, and assorted components and cables. All supplied in a handy carry case with dividers, and a quick start guide with links to online tutorials.

**LEARN MORE AT:**
www.jaycar.com.au/arduino-learning

**$69.95**

**SAVE $10**

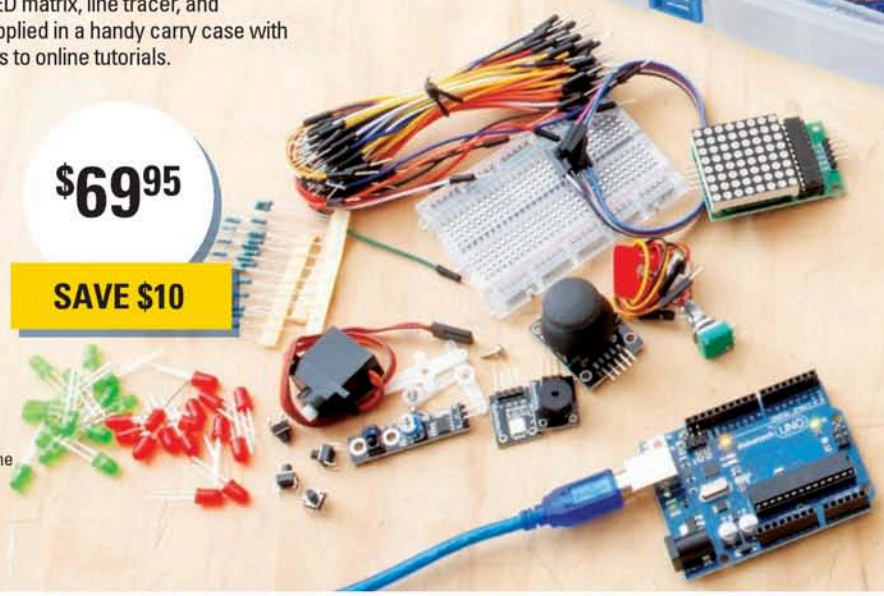

## 1. BEGINNER PROJECT:
### BUILD A SNAKE GAME KIT

Once you have successfully performed some of the online tutorials, you can build this fun old 'Snake' game (Reminiscent of the old Nokia phone and Atari days – showing our age?). All of the necessary components are already included in the XC-3900 kit above.

**LEARN MORE AT:**
www.jaycar.com.au/snake-game

# MAKE PROTOTYPING EASIER

This Linker module and accessories range is based around a series of Arduino® compatible modules, shields and cables that make prototyping easy. It is ideal for schools, big or small kids keen to learn and play with Arduino®. Simply attach linker shields to mainboards and connect with Linker Shields. No soldering required.

**LEARN MORE AT:**
www.jaycar.com.au/linker

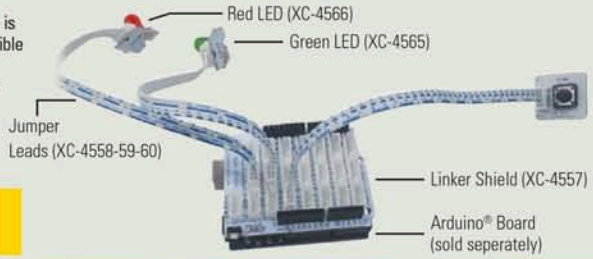


## LINKER BASE SHIELD
XC-4557

**$24.95**

This is the base shield of Linker kit, it allows a connection between all Linker sensors/modules and Arduino®/pcDuino.

- Connections: 1 x SPI, 2 x IIC, 1 x UART
- 69(W) x 59(H) x 18(D)mm

## LINKER JUMPER LEADS

**$4.95 ea**

Connects Linker kit sensors/modules and Linker kit base shield. 2.54mm headers for easy and tidy connection. 4 pins, 2.54mm spaced.

- Sold individually

**200MM** XC-4558
**500MM** XC-4559
**1000MM** XC-4560

**TECH TIP**

## PROGRAMMING MADE EASY WITH ARDUBLOCK:

ArduBlock is a graphical drag-and-drop type programming environment for Arduino®. Ideal for kids! By dragging and dropping colour coded blocks into the workspace, a fully functioning Arduino® program can be created easily!

**TO LEARN MORE ABOUT ARDUBLOCK VISIT:**
www.jaycar.com.au/ardublock

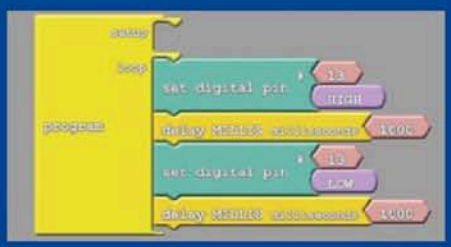


## LINKER 4-DIGIT 7-SEGMENT MODULE
XC-4569

**$11.95**

Uses a chipset of TM1637 to drive a 12-pin 4-digit command anode 7-segment LED. The MCU only needs two GPIO lines to control it.

- I2C interface
- 46.2(W) x 24.3(H) x 14.5(D)mm

## LINKER TOUCH SENSOR XC-4572

**$10.95**

A capacitive touch sensor to replace a push button. Low in power consumption, fast response and easy to operate. Voltage reads 0V when idle, changes to 5V when touched.

- 28(W) x 24(H) x 8(D)mm

## LINKER LED BAR XC-4568

**$9.95**

- Controls 10 LED's
- Create bar graph displays
- 44.1(W) x 24.2(H) x 11.5(D)mm

## LINKER TEMPERATURE MODULE XC-4576

**$6.95**

Uses a Thermistor to detect the ambient temperature. The resistance of a thermistor will increase when the ambient temperature decreases.

- 20.0(L) x 20.0(W) x10.6(D)mm

# WITH ARDUINO®

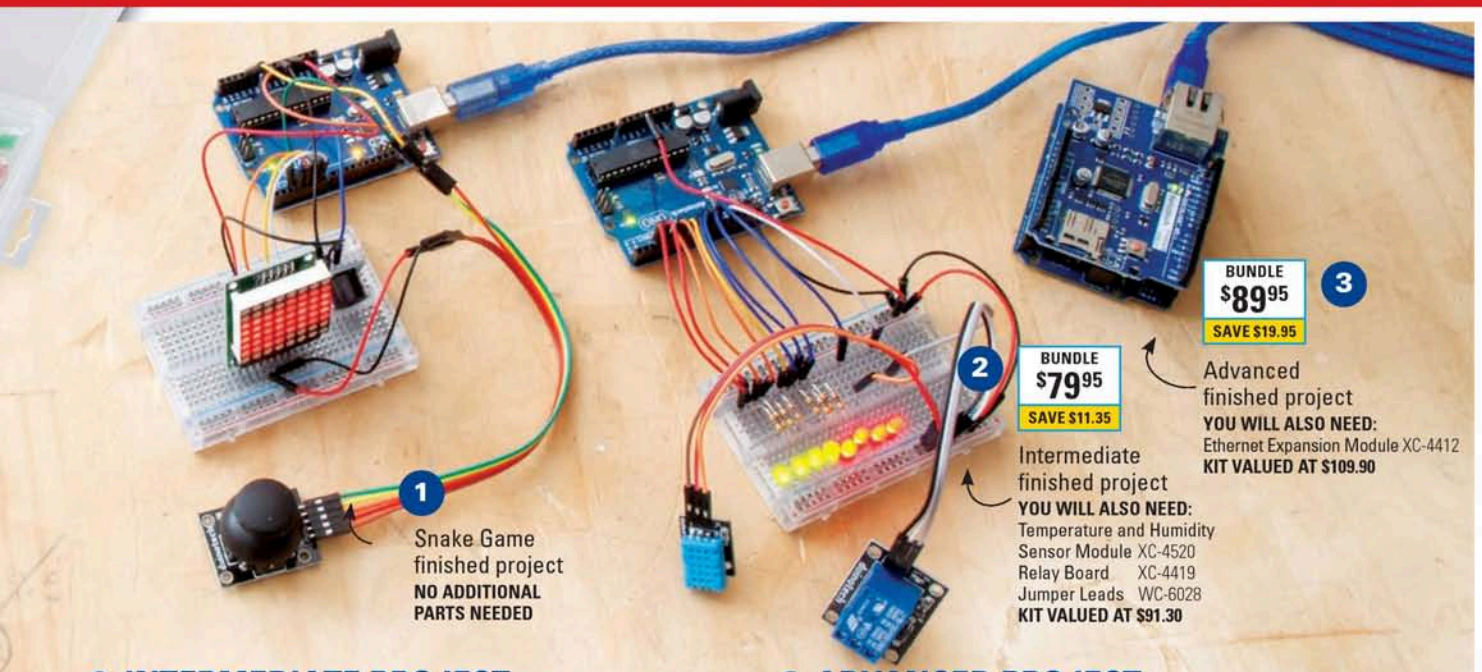

1 Snake Game finished project
**NO ADDITIONAL PARTS NEEDED**

2 **BUNDLE $79.95** **SAVE $11.35**
Intermediate finished project
**YOU WILL ALSO NEED:**
Temperature and Humidity Sensor Module XC-4520
Relay Board XC-4419
Jumper Leads WC-6028
**KIT VALUED AT $91.30**

3 **BUNDLE $89.95** **SAVE $19.95**
Advanced finished project
**YOU WILL ALSO NEED:**
Ethernet Expansion Module XC-4412
**KIT VALUED AT $109.90**

## 2. INTERMEDIATE PROJECT
### BUILD A TEMPERATURE CONTROLLED RELAY

Once you have had your fun with the Snake Game, build this kit for something practical for real-world applications. In this project we show you how to create an Arduino®-based Temperature Controlled Relay (called Thermostat). You'll need to have the XC-3900 kit opposite and a few more parts in-store to get this going.

**LEARN MORE AT:** www.jaycar.com.au/arduino-thermostat

## 3. ADVANCED PROJECT:
### CONTROL YOUR ARDUINO® FROM YOUR PHONE OR COMPUTER

By adding an Ethernet Shield to your project, you can get your Arduino® serving up webpages, displaying sensor information and being controlled by a browser interface. You could even develop your own Arduino® based home automation system!

**LEARN MORE AT:** www.jaycar.com.au/diy-ethernet-controller

# DON'T FORGET THE MAKER ESSENTIALS

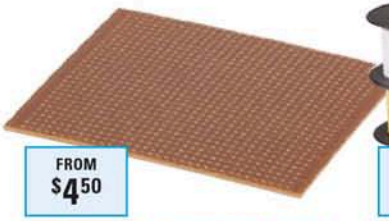

FROM $4.50

### PC BOARDS - VERO TYPE STRIP

Alphanumeric grid, pre-drilled 0.9mm, 2.5mm spacing.

**95MM(W) X 75MM(L)** HP-9540 **$4.50**
**95MM(W) X 152MM(L)** HP-9542 **$7.95**
**95MM(W) X 305MM(L)** HP-9544 **$11.50**

$5.50 ea

### LIGHT DUTY HOOK-UP WIRES WH-3000

Quality 13 x 0.12 tinned hook-up wire on plastic spools. 8 different colours available.

- 25m roll

$7.95

### ARDUINO® COMPATIBLE BREADBOARD PB-8820

Mid-sized prototyping breadboard with 400 tie points. 83(W) x 55(H)mm

- 300 tie points in centre section
- 100 tie points on power rails

$9.95

### BREADBOARD POWER MODULE XC-4606

Adds a compact power supply to your breadboard. Concave design saves space.

- Plugs straight into most breadboards
- Can be set to 3.3V or 5V

$13.50

### ELECTROLYTIC CAPACITORS RE-6250

Ideal for prototyping. Values range from 1uF to 470uF.

- Pack of 55

$11.50

### POLYMORPH PELLETS NP-4260

Softens to be formed into any shape at around 62 - 65° C. It can be drilled, sanded, ground, machined or heated and reformed again and again. 100g bag of 3mm pellets.

### DUINOTECH CLASSIC (UNO) XC-4410

The duinotech classic is a 100% Arduino® compatible development board. Its stackable design makes adding expansion shields a piece of cake.

- Powered from 7-12VDC or from your computers USB port
- ATMega328P Microcontroller

$29.95

# FUN FOR KIDS TO BUILD

## AGES 6+

**REMEMBER WHEN YOU FELL IN LOVE WITH ELECTRONICS?**
Give one of these kits as a gift to your child, grandchild, niece or nephew so they can fall in love with electronics as well. Imagine the joy you'll get while you build it with them.
No soldering required.

$14.95

**KIDS CLOCK KIT** KJ-8996
Bright coloured parts. Easy to assemble. No batteries required. 31 pieces. 195mm Dia.

$34.95

**CAR OR BOAT SNAP ON KIT** KJ-8972
50+ projects including magnet controlled lamp or fan, air propelled car, and underwater or air propelled boat. Requires 2 x AA batteries.

$49.95

**24-IN-1 SNAP-ON SOLAR PROJECT KIT** KJ-8987
Up to 24 projects including a solar coloured lamp, hand crank fan and police siren. Supplied with dynamo hand crank, solar panel and base board.

$49.95

**GYRO ROBOT KIT** KJ-8957
Up to 7 experiments - Robo Gyro, Gyro Compass, Gyrorector, Segway, Rope Walker, Balance Game& Flight Simulator. Requires 3 x AAA batteries.

## AGES 8+

$24.95

**4-IN-1 SOLAR ROBOT KIT** KJ-8965
It can 'transform' between a T-Rex or Rhino beetle with moving legs and jaw, Robot with walking legs and moving wheels, and a futuristic miners drilling machine.

FROM $39.95

**DIY METAL CONSTRUCTION KITS**
Easy to assemble kits for kids. Tools and instructions included. No soldering required.
**RC DUMP TRUCK** 185mm long. LED lights. 4ch remote. 3 x AAA & 4 x AA batteries required. KJ-8998 **$39.95**
**LAMP** 300mm tall. Power using USB (cable supplied) or 2 x AAA batteries. KJ-8999 **$49.95**

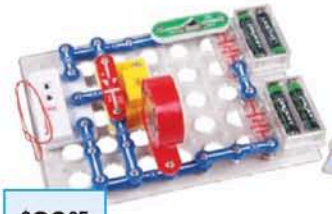

$29.95

**34-IN-1 SNAP ON SOLAR PROJECT KIT**
KJ-8983
Build up to 34 projects including electric fan, FM radio and learn parallel and series circuits. Requires 4 x AA batteries.

$69.95

**698-IN-1 SNAP ON ELECTRONIC PROJECT KIT** KJ-8985
Build you own helicopter, alarm clock, lighthouse, sound effects and more using various controls like light, magnets, sound, water and touch. 50pce kit, requires 4 x AA batteries.

## AGES 12+

$69.95

**ROBOT ARM KIT**
KJ-8916
Capable of 5 separate movements and can easily perform complex tasks. The kit is supplied as parts and makes an excellent project for anyone interested in robotic construction. 100g lift capacity. Requires 4 x D batteries.

*Battery not included.*

$59.95

**HYDRAULIC ROBOT ARM KIT**
KJ-8997
Use it to command 6 axes of varied movement. Use the gripper or the suction cup to lift items up to 50g. Built-in braking system. No batteries required.

$59.95

**3-IN-1 ALL TERRAIN ROBOT**
KJ-8918
Use the 6 terrestrial tracks/crawlers to create a working gripper, rover or forklift. Electric motors and detailed instructions included. Requires 4 x AA batteries.

## AGES 10+

$49.95

**SOLAR POWERED ROBOT KIT** KJ-8966
Transforms into 14 different functional robots.

$49.95

**SMART FRILLED LIZARD KIT**
KJ-8968
Build this interactive lizard, it can be set to follow you or scamper away after spreading its frill. 370mm long. Requires 4 x AAA batteries.

**6-IN-1 SOLAR EDUCATIONAL KIT**
KJ-8936
Build any one of six different projects: windmill, car, dog, plane, airboat, revolving plane. Power from the sun or household 50W halogen light.

$12.95

**CAN ROBOT KIT**
KJ-8939
Build wacky robots out of a coke can, a water bottle or wasted CDs! No batteries required.

$12.95

# EXPLORE BASIC ELECTRONICS

## SHORT CIRCUITS

### TEACH KIDS THE FUNDAMENTALS WITH "OLD SCHOOL" ELECTRONICS

The Electronics magic happens when electrons flows through a conductive circuit, the thing pushing the electrons is called the voltage, and the flow of electrons is called the current. Electronic components include passive components like resistors and capacitors, as well as active components like diodes, transistors and Integrated Circuits (IC). It is important to understand how a transistor works, because this is the building block of most modern circuits including IC's.

A transistor has three terminals, the Base, the Emitter and Collector. When current flows in the Base it causes a larger current to flow through the Emitter, this is called the transistor gain, and it has an amplification effect. This is the theory behind the cool amplifier projects in Short Circuit Volume I, 2 and 3, like stereo amplifiers, and electric guitar special effects amplifiers.

Transistors can also be used as a switch, if the current flowing in the Base of the transistor is large enough, it forces the transistor to enter what is called a saturation mode, where it basically acts like an ON/OFF switch, the Jaycar Short Circuits Intruder alarm, Light Scanner, and Dasher Flasher for cars all utilise this special feature of the transistor circuit.

## TOOLS TO GET YOUNG ENTHUSIASTS STARTED

$2.95 ea

### DURATECH LEAD-FREE SOLDER - HOBBY PACKS

- 99.3% tin, 0.7% copper lead-free
- 12g tube

**0.71MM** NS-3086
**1.00MM** NS-3092

$13.95

### 25W 240V SOLDERING IRON TS-1465

Ideal for the hobbyist and handy person. Has a stainless steel barrel and orange cool grip impact resistant handle. Fully electrically safety approved.

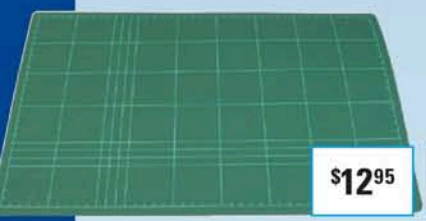

$12.95

### BENCHTOP WORK MAT HM-8100

Durable A3 size PVC cutting mat to protect your work benchtop.

- Ruled with a centimetre spaced grid for easy referencing
- 3mm thick- 450 x 300mm

$29.95

### STAINLESS STEEL CUTTER PLIERS TH-1812

Set of five 115mm cutters and pliers for electronics, hobbies, beading or other crafts. Soft ergonomic grips. Includes flush cutters, long nose, flat nose, bent nose & round nose pliers.

### STARTER KIT WITH SOLDERING IRON & DMM

TS-1652

The ideal starter package for young electronics enthusiasts or the home handyman, this kit contains everything needed for basic electronics work. Includes DMM, 25W soldering iron, de-soldering tool, lead free solder, screwdrivers, side cutters, & long nose pliers.

$39.95

### SHORT CIRCUITS BOOK - VOL.1 AND PROJECT KIT KJ-8502

A great way to teach kids about electronics – no soldering required! Kit includes baseboard, springs and components to make 20+ projects, and 96-page coloured Short Circuits Vol. 1, which is complete with comprehensive assembly instructions and a full technical discussion explaining exactly how the circuit works.

**ALSO AVAILABLE: SHORT CIRCUITS BOOK - VOL.1** BJ-8502 **$9.95**

### SHORT CIRCUITS BOOK - VOL. 2 BJ-8504

Once kids have learnt the basic skills and knowledge from Short Circuits 1, they can move onto learning how to solder with circuit board-based projects. With this book and kits sold separately, they can make such things as; a mini strobe light, police siren, mini organ, etc. All projects are safe and battery powered.

*21 project kits sold separately – see website or in-store*

$12.95

### SHORT CIRCUITS BOOK - VOL. 3 BJ-8505

Volume 3 describes how to build over 30 circuit board-based projects (sold separately) such as Ding Dong door bell, simple intruder alarm and amplifier. Soldering techniques are discussed in detail and proper use of digital multimeter.

*30 project kits sold separately – see website or in-store*

$14.95

**TO LEARN MORE VISIT:**
www.jaycar.com.au/short-circuits

# MY FIRST WORKBENCH

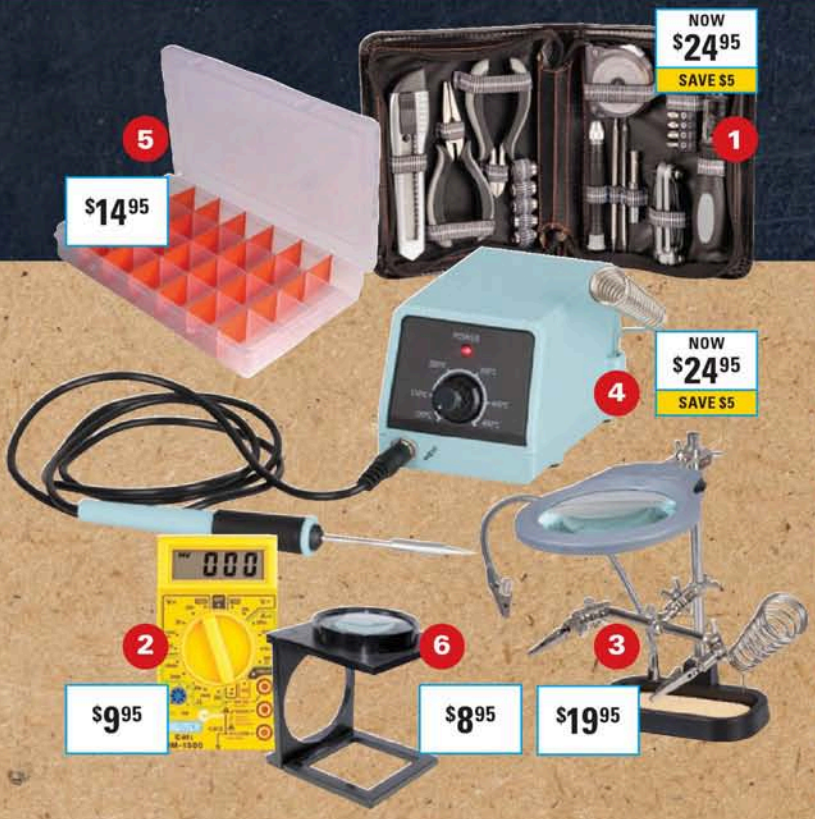


Most of us adults have a workbench of some kind, be it an entire workshop with shadow board or a temporary area on the kitchen table. Why not make a work area for the kids too so they can get "hands-on". Here's just a small selection of the tools to get your kids (or Grandkids) started in the world of making and electronics.

**1. 30 PIECE TOOL KIT WITH CASE** TD-2166 **WAS $29.95**
- Side cutters, long nose pliers, snap-blade knife
- Precision screwdriver with bits
- Folding allen keys 1.5, 2, 3, 4, 5, 6mm
- 210(L) x 160(W) x 48(H)mm

**2. LOW COST DIGITAL MULTIMETER** QM-1500
- Includes transistor & diode test.
- 500V, 2000 count
- AC voltages up to 750V
- DC voltages up to 1000V
- DC current up to 10A

**3. THIRD HAND WITH LED MAGNIFIER** TH-1967
- 2 x Magnifying lens, soldering iron holder, 2 x strong adjustable alligator clips
- Heavy cast iron base for added stability
- Requires 3 x AAA batteries

**4. 10W 240VAC SOLDERING STATION** TS-1610 **WAS $29.95**
- Compact & lightweight
- 10W heating element
- Rotary temperature control dial
- Integrated soldering pencil holder
- 100-450°C Temperature range

**5. 28 COMPARTMENT STORAGE CASE** HB-6313
- Removable partitions allowing customised arrangements to suit your needs
- 2 snap action latches secure the hinged lid
- 357(W) x 48(H) x 220(D)mm

**6. MAGNIFYING GLASS** QM-3505
- 2x magnification
- Huge 4.5" diameter viewer allows hands free operation
- Foldable for easy storage

$24.95

## SOLDERING STARTER KIT
TS-1651

Includes all soldering essentials for various projects. Pack includes 240V 20/130W turbo soldering iron, spare tip, stand, solder, metal solder sucker with spare tip and O-ring.

$14.95

## SOLDERING TOOL KIT TH-1851

Selection of hand-tools and accessories for soldering work. Phillips screwdriver, tweezers, heatsink and 3 double-ended tools for poking, scraping, leg-bending, and flux-removal.

$19.95

## PCB HOLDER TH-1980

Hold PCBs of up to 200 x 140mm in size.

## 5MP USB DIGITAL MICROSCOPE

QC-3199 **WAS $189**

$149

SAVE $40

Excellent for educational purposes or a wide range of applications such as technicians, jewellers, laboratory work, and much more.
- 10x to 300x magnification
- LED illumination
- Adjustable focus dial

$12.95

## 8x10" MAGNETIC MAT TH-1867

Great for keeping nuts and bolts in place. The magnetic side of the mat is the "Whiteboard" side which allows you to write references or notes next to the nuts and bolts.

$13.95

## DIGITAL VERNIER CALIPERS TD-2081

Excellent value for money, ideal for general use. 245mm long.
- 150mm measurement range
- Digital display

$16.95

## WIRE STRIPPER TH-1824

Strips cable without damaging the conductors.
- Automatically adjusts to insulation diameter
- One hand operation
- Spring return

## 6 ROLLS INSULATION TAPE NM-2806
- One roll each of green, black, yellow, white, blue and red
- 19mm wide
- Each 5m in length

$3.95

## JUMPER LEAD KITS WC-6010

Ideal for connecting devices for testing. 10 leads supplied.

**STANDARD** WC-6010 **$6.95**

**HEAVY DUTY** WC-6020 **$11.95**

FROM $6.95

## COMPONENT LEAD FORMING TOOL TH-1810

Get the hole spacing for your resistors and diodes perfect every time. Provides uniform hole spacing from 10 to 38mm.
- 138mm long

$8.95

# EXCLUSIVE CLUB OFFERS:

## FOR NERD PERKS CLUB MEMBERS

**WE HAVE SPECIAL OFFERS EVERY MONTH. LOOK OUT FOR THESE TICKETS IN-STORE!**
**NOT A MEMBER?** Visit www.jaycar.com.au/nerdperks

### NERD PERKS CLUB OFFER

BUY 2 GET 1
**FREE**

**PARTS CABINETS**
**SMALL** HB-6317
**REG $9.95ea.**
**CLUB 3 FOR $19.90**
**LARGE** HB-6318
**REG $24.95ea.**
**CLUB 3 FOR $49.90**

**SAVE 30%**

3 x HB-6317 shown

### NERD PERKS CLUB OFFER

JUST
**$39.95**

**SOLDERING ACCESSORIES KIT**
**VALUED AT $55.65**

**SAVE 25%**

SOLDER NS-3088 BRAID NS-3020 FLUX NS-3070 CLEANER NA-1008

### NERD PERKS CLUB OFFER

**FREE**
**4 PACK AA BATTERIES***

SB-1737

**NI-CD & NI-MH BATTERY CHARGER**
MB-3551 **RRP $59.95**

**SAVE $15.95**

** 2000mAh Ni-MH batteries 4pk valid with purchase of MB-3551*

---

NERD PERKS **SAVE 30%**

**10M CAT 5E PATCH LEAD**
YN-8205 **REG $14.95 CLUB $9.95**
Blue.

NERD PERKS **SAVE 25%**

**12W LED RECTANGULAR FLOOD LIGHT** SL-3931 **REG $39.95 CLUB $29.95**
IP68. 1,136 lumen output.

NERD PERKS **SAVE 15%**

**CCTV VIDEO & POWER CABLES**
WQ-7279 **REG $19.95 CLUB $16.95**
18m.

NERD PERKS **SAVE 20%**

**AUTOMOTIVE FUSED RELAY**
SY-4077 **REG $9.95 CLUB $7.95**
SPST 12V 30A.

NERD PERKS **SAVE 25%**

**DIGITAL THERMOMETER**
QM-1602 **REG $39.95 CLUB $29.95**
Includes K-Type Thermocouple.

NERD PERKS **SAVE 20%**

**MULTI FUNCTION TOOL**
TH-1843 **REG $24.95 CLUB $19.95**
Cutter/stripper. 160mm long.

NERD PERKS **SAVE 20%**

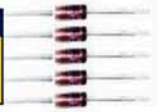

**DIODE 1N4007 1000V 1A D041**
ZR-1008 **REG $12.95 CLUB $9.95**
Pack of 100.

NERD PERKS **SAVE 10%**

**QUICK CONNECTOR PACK**
PT-4536 **REG $39.95 CLUB $34.95**
300 pieces.

NERD PERKS **SAVE 10%**

**12V PROGRAMMABLE INTERVAL TIMER MODULE**
AA-0378 **REG $39.95 CLUB $34.95**

NERD PERKS **SAVE 10%**

**NIBBLING TOOL**
TH-1768 **REG $14.95 CLUB $12.95**
Cuts aluminium, plastic and copper.

NERD PERKS **SAVE 10%**

**75 OHM RG59 COAX CABLE**
WB-2005 **REG $17.95 CLUB $15.95**
30m roll.

NERD PERKS **SAVE 10%**

**RESISTOR PACK**
RR-0680 **REG $16.95 CLUB $14.95**
300 pieces. 1/2W 1%.

---

NERD PERKS CLUB MEMBERS RECEIVE:

# 20% OFF ENCLOSURES*

** Includes Sealed Polycarbonate, Potting Boxes, Jiffy, Bulkhead, Sealed ABS, Polystyrene boxes and Instrument Cases.*

**YOUR CLUB, YOUR PERKS:**
**CHECK YOUR POINTS & UPDATE DETAILS ONLINE.**
**LOGIN & CLICK "MY ACCOUNT"**
*Conditions apply. See website for T&Cs*

# WHAT'S NEW

**WE'VE HAND PICKED JUST SOME OF OUR LATEST NEW PRODUCTS. ENJOY!**

## 20MHZ USB OSCILLOSCOPE

QC-1929

$199

Ideal for the traveling or compact workbench. Provides 20MHz bandwidth and high accuracy. Includes 2 x probes.

- USB interface plug & play
- Automatic setup
- Waveforms can be exported as Excel/Word files
- Spectrum analyser (FFT)
- External trigger input

$899

## 100MHZ DUAL CHANNEL OSCILLOSCOPE QC-1936

Lightweight and compact unit with large 7-inch colour-LCD for detailed readings. Built-in waveform generator for various testing applications. Includes 2 probes and USB cable.

- PC connection via USB
- SD card support

*See website for specifications*

## 12V/24V BATTERY TESTER W/LCD QP-2263

$24.95

Displays the charge condition of your 12V or 24V car, RV or boat batteries. Includes battery clamps, eye terminals, and cigarette lighter socket. 75(W) x 48(H) x 19(D)mm.

- Voltage range: 11-17VDC / 22-30VDC.

## 12VDC 30A SINGLE RELAY WIRING KIT SY-4081

$39.95

Safe and easy method to install any high current 12V device in the car such as a fridge or driving lights.

- Includes 2m wiring loom, 30A relay, & contura style switch

## COMING SOON...

## AIRBLOCK MODULAR PROGRAMMABLE DRONE

KR-9220

A 7-piece modular drone that can be turned into a hovercraft, car, spider and more! It is made from light but durable plastic foam so you can bump into walls without making dents. Control it from your Smartphone or iPad via Bluetooth using a freely available iOS or Android app. Control and program your aerial stunts through the Makeblock App. Simply drag-and-drop different blocks of commands - like forward, pause, turn, and forward - and connect them together to create a seamless action. Ages 8+.

- 6-axis Drone: 235(L) x 54(H)mm
- Hovercraft: 335(L) x 208(W) x 126(H)mm

**ONLY $299**

*Airblock's Visual Programming Software. Tablet not included*

Makeblock
Construct Your Dreams

**DUE OCTOBER. KEEP AND EYE ON OUR WEBSITE FOR LAUNCH.**

## 1080P AHD STARLIGHT CAMERAS

QC-8678

QC-8680

Starlight is a revolutionary new sensor technology, providing increased clarity and full colour in low light conditions. Vari-focal 2.8-12mm lens for optimum coverage. Built-in infrared LEDs for zero light situations.

**BULLET** QC-8678
**DOME** QC-8680

$199ea

*Regular CMOS*

*Starlight Technology*

## USB TO RS-485/422 CONVERTER XC-4136

RS-485/422 is commonly found in thermal printers (eg, point of sale), modem communications, etc. This converter provides that connection from your modern USB port with great reliability.

- Automatically detects serial signal rate
- Plug & Play
- Up to 480Mbps

$49.95

## NOTICED SOMETHING DIFFERENT?

You'll have noticed that store details have disappeared on this page. With over 100 stores across Australia & New Zealand, we can no longer fit them into the space allocated, instead - we are going to use the space to highlight NEW products. If you are looking for store details please visit **www.jaycar.com.au** or call **1800 022 888**

**TERMS AND CONDITIONS:** REWARDS / NERD PERKS CARD HOLDERS FREE GIFT, % SAVING DEALS, DOUBLE POINTS & MEMBERS OFFERS requires ACTIVE Jaycar Rewards / Nerd Perks Card membership at time of purchase. Refer to website for Rewards/Nerd Perks Card T&Cs. PAGE 2: Intermediate Kit includes 1 x XC-3900 + 1 x XC-4520, 1 x XC-4419, + 1 x WC-6028. Advanced Kit includes 1 x XC-3900 + 1 x XC-4412. PAGE 7: Nerd Perks Card holders receive special price of $39.95 for Soldering Accessories Kit (1 x NS-3088, 1 x NS-3020, 1 x NS-3070 & 1 x NA-1008) when purchased as bundle. Nerd Perks Card holders receive special price of $19.90 for 3 x HB-6317 Small Parts Cabinets & $49.90 for 3 x HB-6318 Large Parts Cabinets. Nerd Perks Card holders receive FREE Rechargeable AA batteries (SB-1737) valid with purchase of MB-3551 Battery Charger. Nerd Perks Card holders receive 20% OFF Enclosures applies to Jaycar 230 Plastic Boxes product category.

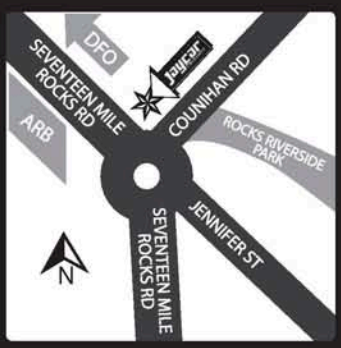


## NEW STORE: JINDALEE

2/601 Seventeen Mile Rocks Rd, 4073 QLD
PH: 07 3715 6377

## FOR YOUR NEAREST STORE & OPENING HOURS:

**1800 022 888**

**www.jaycar.com.au**

**92 STORES & OVER 140 STOCKISTS NATIONWIDE**

Jaycar Electronics

**Head Office**
320 Victoria Road,
Rydalmere NSW 2116
Ph: (02) 8832 3100
Fax: (02) 8832 3169

**Online Orders**
www.jaycar.com.au
techstore@jaycar.com.au

**09-17-01-01**

*Arrival dates of new products in this flyer were confirmed at the time of print but delays sometimes occur. Please ring your local store to check stock details. Occasionally there are discontinued items advertised on a special / lower price in this promotional flyer that has limited to nil stock in certain stores, including Jaycar Authorised Stockist. These stores may not have stock of these items and can not order or transfer stock. Savings off Original RRP. Prices and special offers are valid from Catalogue Sale 24 August - 23 September, 2017.*

## Are we about to make yet another monumental mistake?

**Let's face it: Australia has had some really dumb decisions over the years when it comes to communications. Like plonking VHF TV channels in the international FM Radio band many years ago. Like recently shutting off Radio Australia shortwave services so the bush has no viable alternative. Are we about to make yet another one with DAB+?**

# What's next for Australian Broadcast Radio?

by ALAN HUGHES

**Currently we have a mish-mash** of broadcast radio services in Australia. Depending mainly on topography, the capital cities are relatively well-served with AM, FM and DAB+

Move to regional then to outback areas, the choice quickly reduces to less, to not much, to none at all.

But Australians could have truly national radio services and countries such as New Zealand and Indonesia are showing the way with DRM – Digital Radio Mondiale.

Currently we have AM, FM and DAB+ digital radio in all mainland State capitals, and AM and FM covering regional areas.

But since 31st January this year, when the ABC in its wisdom switched off all shortwave broadcasts, there are no radio services for the 628,000 in the "outback".

Of course, you can listen to literally thousands of radio stations from all around the world, streaming via the mobile phone network or the internet. The former assumes you have mobile phone coverage – there are huge areas of Australia without it – and which costs you a significant amount of money.

Typical streaming radio consumes up to 60MB per hour, so depending on your plan, could gobble up your allowance in very short time.

Alternatively, you can listen to *some* radio services (mainly ABC/SBS) in the home via VAST – Viewer Accessed Satellite Television – but you cannot watch TV and listen to radio at the same time. And this is obviously impractical for mobile (vehicle) listening.

It hasn't always been this way; until last January Radio Australia had 50kW shortwave transmitters in Katherine, Tennant Creek and Alice Springs and seven 100kW transmitters in Shepparton, although only three were in use. Now they are all switched off.

The ABC claims to be using the money saved from switching off HF broadcasting (reported to be just $1.9 million a year) to pay for the extension of DAB+ transmitters. But even if this happens, the turn-off has left the outback areas without any viable radio service.

### AM, FM and DAB+

All told, there are 540 AM transmitters in Australia radiating from 50W to 50kW and almost 2,500 FM transmitters in Australia radiating from 1W to 250kW plus there are 73 standby transmitters. Each transmitter carries a single program with some transmitting Radio Data Service (RDS) for the display of a line of text. Some ABC transmitters are not fed with stereo sound, even though they might show a "stereo on" indication on the receiver.

By contrast, each DAB+ transmitter carries between 15 – 26 programs. The ABC is transmitting 11 programs and SBS eight programs. All DAB+ sites have three 50 kW(erp) transmitters except Adelaide and Perth which have two each. In addition there are 37 on-channel repeaters.

Mobile broadband streaming through the mobile phone network of cellular transceivers is being promoted particularly by AM broadcasters.

But while this may work (at a cost) in more populated areas, this is not a solution for remote areas since mobile phone coverage is sporadic, at best.

Satellite phones are available but their operating costs are very high compared to cellular (mobile) phones. To cover the bush, a huge number of uneconomic mobile phone transmitters would be required – and unlike a broadcast radio receiver, the phone network must track the movement of

the phone through the network, which drains the phone battery.

So currently there is no effective radio coverage for the outback. At the time of writing, a bill is before the Senate to force the ABC to resume shortwave transmissions, but there is no guarantee of success.

## Does AM/FM radio even have a future?

If you live in the major cities or regional areas, you may not care about radio in the outback.

But it is possible, even probable, that we may not always have AM and FM in our cities – and that might happen sooner than you may think.

The future may mean DAB+ only in the cities and not much in the regions. You might scoff but look at the trends.

Currently there are 3.8 million people able to access DAB+ stations out of a licence area covering 14.8 million people. There are also 826,000 vehicles which have DAB+ radios, compared with a total of 10.4 million vehicles.

In 2016 more than 33% of new passenger vehicle sales were fitted with DAB+ radios, a huge rise, which will continue because of the widespread adoption of DAB+ in Europe. Many of the AM radio transmitters in Europe (and even many FM) have been permanently switched off.

Take Norway, for example: by the end of this year they will have switched off their remaining FM transmitters, leaving only DAB+ radio.

99.5% of the Norwegian population have access to DAB+ and 98% of new vehicles sold there have DAB+ radios factory fitted (DAB+ adaptors are available for older cars).

Back here in Australia, receivers for AM radio are becoming harder to buy. As a result in a trip to a major chain store, I found only one receiver/AV system which would receive AM. Most are either DAB+/FM or FM only.

The same applies to receivers available on line – they're cheaper to make because they don't have AM.

The AM broadcasters can see this trend even if the listeners are unaware.

## DAB+ expansion

Next year, DAB+ broadcasting will start in the regions, as shown in Table 1. One would expect the largest populations would be the first to receive their new transmissions. This matches the multi-broadcaster capability of DAB+ but also has the smallest coverage area of the options available.

| Area | Population (000s) | Dwellings/ Vehicles (000s) | Ch | Power ea ($kW_{erp}$) |
|---|---|---|---|---|
| Gold Coast | 570 | 465 | 9D, 8B | 5# |
| Newcastle/Lower Hunter | 518 | 417 | | |
| Sunshine Coast | 347 | 298 | | |
| Central Coast | 328 | 260 | | |
| Illawarra | 293 | 216 | | |
| Geelong | 279 | 238 | | |
| Canberra/Queanbeyan | 253 | 198 | 8D, 9C | 5 |
| Cairns | 240 | 186 | | |
| Townsville | 229 | 181 | | |
| Hobart | 222 | 168 | 9A, 9C | 20 |
| Darwin | 137 | 105 | 9A, 9C | 20 |
| *Data sourced from the 2016 Census.* | | | *# with possibly 3 repeaters* | |

**Table 1: planned expansion during 2018 of DAB+ services to major regional population centres. However, with limited transmitter power, the coverage area will also be limited.**

Some regional areas will be restricted to one transmitter to carry maximum of four commercial broadcasters, two community broadcasters, ABC local Radio and two high-power open network broadcasts such as the TAB, religious and particular language broadcasts.

With a capacity of nine broadcasters for each transmitter, there will be unused capacity.

Major areas may have a second transmitter, which will carry all other ABC/SBS programs using a single frequency network. This means that the transmitter and all those geographically adjacent to it must use the same channel and have identical programs at the same time. This will cause the ABC problems near state borders, as news bulletins are different.

In addition on the NSW/Qld and Vic/SA borders, the time zone changes will result in channel 9C being used on one side of the border and channel 8B on the other.

But this has major drawbacks because the proposed DAB+ transmitters are mostly 5kW – and this would mean that their coverage is even less than existing FM transmitters, so that is not going to extend radio coverage in regional or outback areas.

DAB+ was initially designed for Europe, which has 500 million people spread over an area of 10 million square kilometres compared to Australia with 24 million people spread over 7.7 million $km^2$.

Currently the planning is to use low power DAB+ which will produce an effect like mobile broadband coverage. Both need for large numbers of low powered transmitters which produces an uneven "spotty" coverage.

This is mainly caused by the approximately 200MHz transmission frequency of DAB+ and the coverage will be smaller than for the present FM broadcasts (which transmit around 100MHz).

## DRM: the solution for covering low population density

It's not something that many people have even heard about in Australia but the only real solution is Digital Radio Mondiale Plus (DRM+).

This is basically long-distance digital radio, designed to cover large areas at much lower cost than DAB+. Rather than the eight DAB+ channels, there are 119 transmission channels available between 56 – 68MHz (the old analog TV channels 1 and 2).

Because their frequency is around a quarter of that used for DAB+, these signals have very much wider coverage and penetrate buildings better.

A DRM+ channel could carry ABC local radio at its present 64kbit/s and the pair of current commercial programs at 48kbit/s each, which is common practice, leaving 26kbit/s for pictures and text.

The transmitter could be located at the current commercial broadcasters' FM transmitter site which is close to their audience.

So how does DRM work? Jim Rowe explains it opposite . . . SC

# The Future of Drm Radio Broadcasting?

By JIM ROWE

**There is no doubt that DRM digital radio would provide the best way of extending radio broadcasting over the whole of Australia – and further. Here's how it works.**

**DRM or Digital Radio Mondiale** was developed and is promoted by the DRM Consortium, an international not-for-profit consortium which has over 100 member organisations in 39 countries.

Many of the members are broadcasters, but there are also many transmitter and receiver manufacturers as well as broadcasting standards bodies.

The aim of the Consortium is to support and spread a digital broadcasting system suitable for use in all of the frequency bands up to VHF band III. You can find more about the DRM Consortium at www.drm.org

By the way, "mondiale" simply means "world wide" in both French and Italian.

There are two main variants of DRM. First there is DRM30, intended specifically for use on the traditional low, medium and high-frequency (shortwave) bands below 30MHz and on the existing AM broadcasting channels within them. The other variant is DRM+,which uses frequencies from 47-108MHz – these include the old analog TV channels 1 and 2 as well as the FM broadcast band.

They can also carry digital data services along with the audio signals, such as station names, time, date and program information.

## DRM30, DRM+ and DAB+

So where does DAB+ fit into this proposed DRM-based digital radio future? After all, we've now had digital radio broadcasting in Australia for the last eight years or so using the DAB+ system.

But because DAB+ works in VHF Band III (174–240MHz), it has a relatively short range and as a result is really only suitable for the larger cities and their suburbs.

Although DRM30 looks set to become the world standard for digital radio broadcasting below 30MHz, DRM+ might well end up competing with DAB+ in the VHF band.

This is quite possible, because DRM+ is being promoted as a replacement for analog FM broadcasting in the 88–108MHz band.

Receivers able to receive both DAB+ and DRM+ – as well as DRM30 , analog AM and FM – are starting to appear. But what's the difference between DRM and DAB+ anyway? In fact, there are many technical similarities and not many differences.

All are digital audio broadcasting systems which use OFDM – the technique of modulating digital information on an array of closely-spaced RF subcarriers, instead of a single main carrier.

This is exactly the same kind of modulation used in DVB-T television, wireless LANs (IEEE 802.11a, g and n) and ADSL broadband over copper telephone lines.

DRM has now been updated to xHE-AAC which is backward-compatible to HE AAC V2. The xHE AAC can produce excellent speech quality at a much lower bit rate. DAB+ is yet to upgrade. HE AAC is used for sound in MP4 or MPEG4 video. These compression systems reduce the amount of data required for transmission so that it will fit in the channel bandwidth

## Vive la différence!

The differences between the two

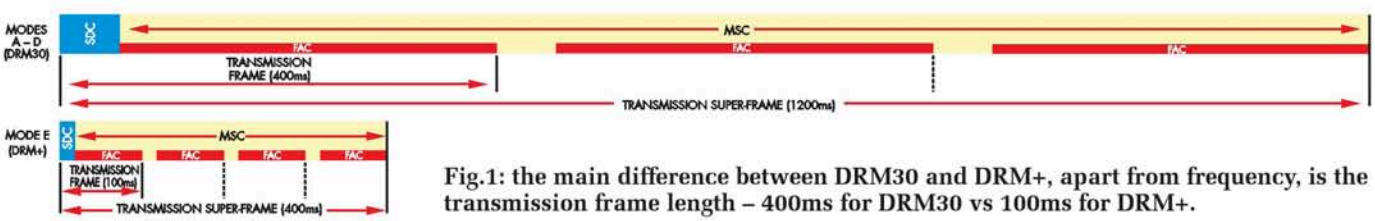


**Fig.1: the main difference between DRM30 and DRM+, apart from frequency, is the transmission frame length – 400ms for DRM30 vs 100ms for DRM+.**

systems are rather more subtle.

DAB+ uses 1,536 subcarriers transmitted in parallel, each with a bandwidth of 1kHz and spaced apart by the same figure. This gives a DAB+ subcarrier channel with a total bandwidth of 1.537MHz and can convey between 15 and 26 different high quality digital audio signals as well as their accompanying data.

The program data is assembled into blocks, labeled and each program is sent sequentially until all have been sent and then the sequence is repeated continuously. The individual signals are separated again in the receiver.

In contrast with this DAB+ multiplexing system, DRM30 has been designed specifically for use in the 'AM' bands below 30MHz.

Since Australian AM radio stations have an RF bandwidth of 18kHz, this can also be used. For HF broadcasting the bandwidth could be 5, 10 or 20kHz depending on frequency availability. The greater the bandwidth, the higher the reliability or better quality.

DRM30, DRM+ and DAB+ can all transmit stereo sound but HF DRM30 can give continent-wide stereo coverage.

## Modes, bandwidth and QAM options

To achieve the desired level of performance on the bands below 30MHz, DRM30 broadcasters use four different encoding 'modes' designated A, B, C and D, while DRM+ broadcasters use a fifth encoding mode designated (you guessed it!) E.

Each of these modes is designed to achieve the best performance in a different broadcasting application, as you can see in Table 1.

You'll also note from this table that the main service channel or MSC (ie, the digital audio channel itself) of both DRM30 and DRM+ signals is generally modulated onto the RF subcarriers using the quadrature amplitude modulation (QAM) system. DRM30 broadcasters have the option of choosing either 64-QAM or 16-QAM coding, while DRM+ broadcasters can use either 16-QAM or 4-QAM.

The idea behind this is that 64-QAM can encode 64 points in its amplitude/phase or "I/Q constellation", allowing the subcarriers to carry five bits of information in each digital sample or 'symbol' – and hence a higher total bit rate.

However, the 64 points in a 64-QAM constellation are inevitably closer together in both amplitude and phase, making it more susceptible to data corruption, due to noise and interference.

In contrast, 16-QAM has only 16 points in its amplitude/phase constellation, so the individual points are further apart – making it more suitable for noisy conditions, even though it can encode only 4 bits of information in each digital symbol (and hence a lower overall bit rate).

The 4-QAM option available for DRM+ takes this trade-off even further, allowing it to encode only two bits per digital symbol and hence a lower overall bit rate again. But that's not really too much of a problem when DRM+ signals are encoded into a 100kHz wide channel, as you can see from Fig.1.

**This GR-216 DRM30 receiver has been evaluated by Tecsun Radios (Aust) and they have confirmed that it receives DRM transmissions from New Zealand in Australia. This receiver also handles AM and FM reception.**

**DRM (Digital Radio Mondiale) TRANSMISSION MODES & OPTIONS**

| VARIANT | MODE | TYPICAL USES | SIGNAL BANDWIDTH OPTIONS (kHz) | MSC QAM CODING OPTIONS | AVAILABLE BIT RATE (kbps) |
|---|---|---|---|---|---|
| DRM30 | A | LF & MF GROUND WAVE, 26MHz BAND LINE-OF-SIGHT | (4.5, 5) | 16-QAM | 13.1 – 16.4 |
| | | | 9 | 64-QAM | 19.7 – 30.9 |
| | | | 10 | 16-QAM | 14.8 – 18.4 |
| | | | (18, 20) | 64-QAM | 22.1 – 34.8 |
| | B | MF & HF TRANSMISSION ON SKY WAVE | (4.5, 5) | 16-QAM | 10.2 – 12.8 |
| | | | 9 | 64-QAM | 15.3 – 24.1 |
| | | | 10 | 16-QAM | 11.6 – 14.6 |
| | | | (18, 20) | 64-QAM | 17.5 – 27.4 |
| | C | DIFFICULT SKY WAVE CHANNELS ON HF | 10 | 16-QAM | 9.2 – 11.5 |
| | | | | 64-QAM | 13.8 – 21.6 |
| | | | 20 | 16-QAM | 19.3 – 24.1 |
| | | | | 64-QAM | 28.9 – 45.5 |
| | D | NVIS SKY WAVE (HIGHEST DOPPLER & DELAY SPREAD) | 10 | 16-QAM | 6.1 – 7.6 |
| | | | | 64-QAM | 9.1 – 14.4 |
| | | | 20 | 16-QAM | 13 – 16.2 |
| | | | | 64-QAM | 19.5 – 30.6 |
| DRM+ | E | VHF TRANSMISSIONS IN BANDS ABOVE 30MHz | 100 | 16-QAM | 99.4 – 186.3 |
| | | | | 4-QAM | 37.2 – 74.5 |

**Table 1: the choice of frequencies, modes and coding options depends to a large extent on the coverage distance desired.**

## DRM's three data channels

The next thing to understand about DRM is that each DRM broadcasting signal consists of three basic data channels.

There's the Main Service Channel (MSC), which generally carries the encoded digital audio data; then there's the Fast Access Channel (FAC), which carries a set of data parameters allowing

| CURRENT DRM30 TRANSMISSIONS IN THE SOUTH PACIFIC | | | | |
|---|---|---|---|---|
| TIME (UTC) | TIME (EAST) | FREQUENCY | BROADCASTER | TARGET AREA |
| 16:45 – 19:00 | 02:45 – 05:00 | 5975 kHz | RADIO NEW ZEALAND | COOK IS, SAMOA, TONGA |
| 16:45 – 19:00 | 02:45 – 05:00 | 6115 kHz | RADIO NEW ZEALAND | COOK IS, SAMOA, TONGA |
| 16:45 – 18:45 | 02:45 – 04:45 | 7285 kHz | RADIO NEW ZEALAND | COOK IS, SAMOA, TONGA |
| 16:45 – 18:45 | 02:45 – 04:45 | 7330 kHz | RADIO NEW ZEALAND | COOK IS, SAMOA, TONGA |
| 17:45 – 20:00 | 03:45 – 06:00 | 9760 kHz | RADIO NEW ZEALAND | COOK IS, SAMOA, TONGA |
| 19:45 – 21:00 | 05:45 – 07:00 | 11690 kHz | RADIO NEW ZEALAND | PACIFIC |
| 07:59 – 09:00 | 17:59 – 19:00 | 17790 kHz | BBC WORLD SERVICE | SE ASIA |

**Table 2: Australia is significantly lagging behind when it comes to DRM broadcasts – this table shows Radio New Zealand's DRM schedule to the South Pacific.**

the receiving decoder to quickly confirm things like the modulation system being used in the DRM signals.

Finally there's the Service Description Channel (SDC), which carries advance information like audio and data coding parameters, program service labels, the current time and date, and so on.

Fig.1 should give you a basic idea of the way these three data channels are grouped into the data stream transmitted in DRM30 and DRM+ digital broadcasting.

The DRM30 modes group the data into 1200ms-long "super frames" consisting of three frames 400ms long, while DRM+ groups the data into 400ms-long super frames each consisting of four frames 100ms long.

In both cases the SDC data is transmitted across all subcarriers for a period of two symbols at the start of each super frame.

For the rest of each super frame, the FAC data is transmitted using a specific sub-group of subcarriers during each transmission frame, while the coded audio data in the MSC channel is transmitted using all of the remaining subcarriers, in parallel with the FAC data for all of rest of the super frame.

## DRM status world wide

While we haven't heard much about DRM as yet in Australia, it's now well established in the UK, many of the European countries, Canada, India and Russia – plus in New Zealand.

Radio Australia did transmit DRM30 on shortwave to Papua New Guinea from Brandon (Qld) but that ended in March 2015.

Radio New Zealand International broadcasts DRM30 on shortwave for about 20 hours per day, mainly to the Pacific Islands.

Receivers capable of receiving DRM30 are still in fairly short supply in Australia, and a lot of the DRM reception to date seems to have been using PC-based SDRs (software defined radios) – see our articles in the November 2013 issue of SILICON CHIP (www.siliconchip.com.au/Article/5456 and www.siliconchip.com.au/Article/5459).

However some of the European manufacturers like Morphy Richards have been producing DRM30 receivers, and Indian firm Avion Electronics (India) lauched its AV-DR-1401 radio recently.

Chinese firm Gospell Digital Technology has also announced its GR-216 DRM receiver.

Other DRM receivers you'll find on the web are the Himalaya DRM2009, the Technisat Multiradio and the Uniwave Di-Wave 100.

## Why DRM30 for Australia?

DRM30 digital broadcasting is particularly suitable for Australia, because of its much larger range. For example a DRM30 broadcast transmitter operating in the 'AM' band will have a range virtually identical to that of our existing analog AM broadcasters. And a 250kW HF DRM30 transmitter located in the geographical centre of Australia (Kulgera, NT) could cover just about all of the continent and surrounding waters.

A much lower power DRM30 transmitter located in the geographical centre of Tasmania (Liena) could similarly cover the whole of that state.

So adopting DRM30 would be the best way to ensure that ALL Australians received good broadcast radio reception – even those living in or moving through remote areas.

And this brings up another point: DRM30 operating at HF provides much better reception in moving vehicles than either FM or DAB+ – which operate in the VHF spectrum.

Best of all, though, is that existing AM and shortwave transmitters could in most cases be converted for DRM30 broadcasting at very low cost.

The question really is this: why is Australia dragging its heels and letting just about all the rest of the world move into the digital radio future with DRM30 – when we could join them with very little outlay? SC

**This "Avion" AV-DR-1401DRM Digital Radio sells on Amazon in India for about AU$330. Touted as India's first DRM, it will also receive AM and FM broadcasts.**

# Dead-easy Superhet IF Alignment using Direct Digital Synthesis

**This project is based on the touch-screen Micromite DDS Signal Generator project and makes aligning the IF stage of superhet sets a snap, whether they are valve or transistor-based. It also lets you examine the IF stage bandwidth, which gives a good indication of the set's selectivity, as well as the shape of the IF curve.**

**In the simplest terms,** a superheterodyne AM radio works by mixing (ie, heterodyning) the radio station signal with a tracking oscillator signal that has a fixed frequency offset above (ie, super) that of the tuned station.

The output of the mixer includes components at the sum and difference frequencies of the two input signals. The following stages reject all but the difference frequency and this carries the same audio (amplitude) modulation as the incoming signal from the radio station.

The difference frequency is known as the Intermediate Frequency (IF) and the IF circuitry normally comprises two stages with tuned resonant circuits, each involving a transformer with adjustable cores (slugs).

In more detail, the primary and secondary windings of each transformer have parallel capacitors and their cores need to be adjusted so that their resonant frequency matches the IF, eg, 455kHz or 450kHz.

Adjusting the transformers in this way maximises the gain of the radio and the whole process is referred to as IF alignment. IF alignment also optimises the Q of each stage and this increases the rejection of unwanted signals (outside the tuned circuit's resonant range).

This has the effect of increasing the selectivity of the radio which means that it is easier to tune when stations are crowded together on the dial.

Normal alignment also involves adjusting the antenna input circuits so that stations at the top and bottom of the dial (ie, the full timing range) are actually received at the marked points (ie, the station call sign or the transmitter frequency on the dial).

Note that some sets with a wide audio bandwidth (say 10kHz or more) may have the IF transformer cores adjusted to slightly different frequencies, say 447kHz and 463kHz, in the case of a 455kHz IF. This "staggered tuning" gives a wider audio bandwidth but slightly lower gain.

**by Nicholas Vinen**

For more information on how a superhet set works, see the AM Radio Trainer project in the June 1993 issue; it's available as a PDF download from our online shop at www.siliconchip.com.au/Shop/5/3435

We also published a detailed description of the operation of the IF stage in the December 2002 issue; see www.siliconchip.com.au/Article/6698

## Aligning the IF stages

There are a number of methods by which you can do alignment on an AM radio but the simplest approach involves injecting a signal into the set which can be set to the intermediate frequency.

If this signal is modulated (typically at 400Hz), you can easily judge the effect of your adjustments by the loudness of the tone in the radio's loudspeaker. That means you need a

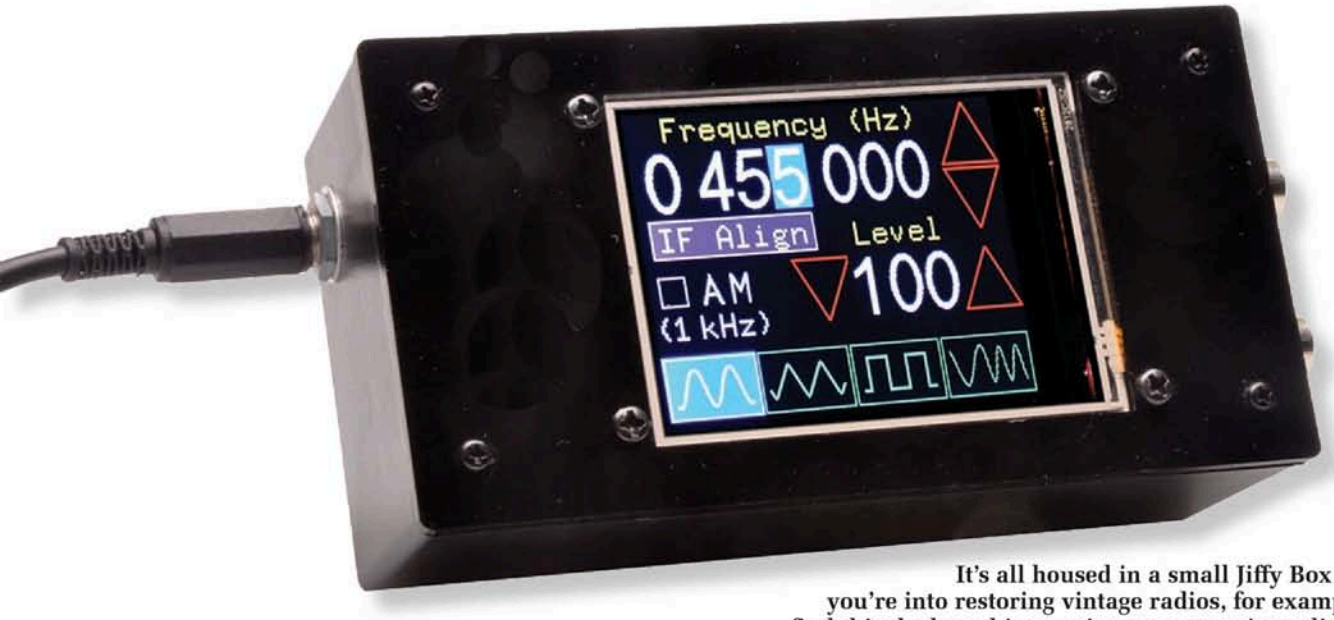


**It's all housed in a small Jiffy Box . . . and if you're into restoring vintage radios, for example, you'll find this the best thing you've ever seen since sliced bread!**

modulated RF oscillator which can be set to precisely 450 or 455kHz.

It is also desirable that its output is a clean sinewave, ie, with few harmonics to cause problems in the alignment results.

Unfortunately, the output waveform of most old valve and transistor RF oscillators is surprisingly distorted and their output amplitude can also vary significantly as the frequency is changed.

But there is a much easier and more elegant way and here is where modern technology comes to the rescue.

## Sweep oscillator

What we would really like is to plot of the set's detector output against the injected frequency so we can actually see what the IF stage frequency response looks like.

That's just what this project does. It produces a signal which is swept over a range of frequencies around the nominal IF and it measures the output of the voltage detector (usually a diode just preceding the volume control).

The varying DC output can then be plotted on an LCD screen.

You can set the centre frequency and span and it automatically scales the vertical axis and adds cursors showing the peak frequency and (if visible) -3dB points.

That makes doing the IF alignment, and even setting the IF bandwidth, easy!

But we are getting ahead of ourselves. Fig.1 shows the concept. The sweep oscillator can be thought of as an oscillator which can be set to vary in a linear fashion from say, 440kHz to 470kHz, repeatedly.

This signal is connected to the input of the IF stages and the output of the detector is connected to an oscilloscope.

But we have combined the sweep oscillator and the oscilloscope screen into the one unit.

For the sweep oscillator, we're using a Direct Digital Synthesis (DDS) module based on the Analog Devices AD9833 IC.

Then we're using the Micromite LCD BackPack to provide the oscilloscope function, to display the result.

Because the Micromite is controlling the DDS, it can synchronise the plotted result on the screen with the frequency of the sweep oscillator.

The hardware used in this project is pretty much the same as that in the Micromite BackPack Touchscreen DDS Signal Generator that was published in the April 2017 issue.

The main changes are to the software, to provide the sweep and plotting function. There's just a slight change hardware, to provide the required analog voltage measurements.

## Circuit operation

The circuit diagram for the DDS IF Alignment unit is shown in Fig.2. Most of the work is done by the Micromite software running on the BackPack and the arbitrary waveform generator module which contains the AD9833 IC.

If you compare this diagram to the one from the Touchscreen DDS Function Generator in the April issue (on page 70), you will see a few minor changes.

Firstly, we have changed the coupling capacitors from the PGA (pro-

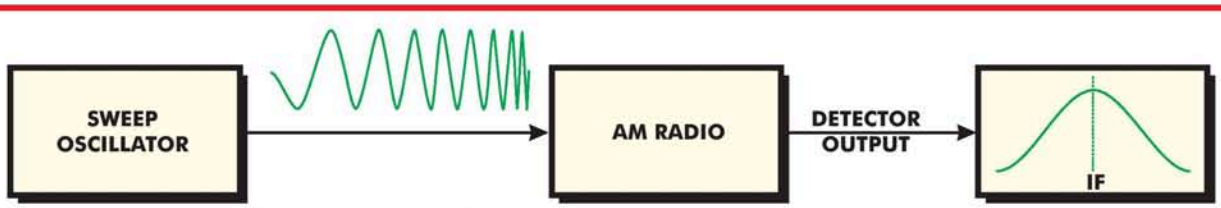


**Fig.1: an overview of how this unit can be used to plot the frequency response of the IF stage in a radio. A sinewave signal is produced which sweeps from just below the intermediate frequency to just above and this is injected into the set via its antenna. The detector voltage is then plotted against the sweep frequency on an LCD screen to produce a frequency response plot. Note that the sweep oscillator's output is not amplitude modulated.**

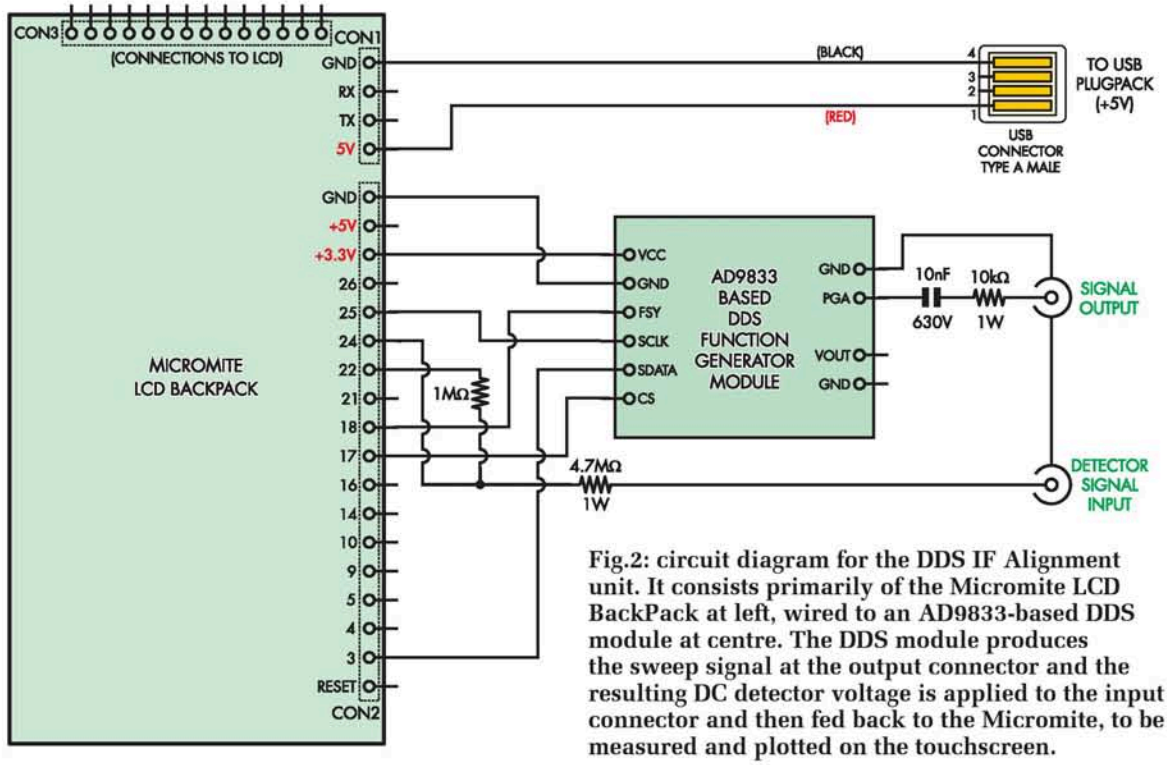


**Fig.2: circuit diagram for the DDS IF Alignment unit. It consists primarily of the Micromite LCD BackPack at left, wired to an AD9833-based DDS module at centre. The DDS module produces the sweep signal at the output connector and the resulting DC detector voltage is applied to the input connector and then fed back to the Micromite, to be measured and plotted on the touchscreen.**

grammable gain amplifier) output of the DDS module to the output connectors to a single 10nF 630V type, primarily to provide protection for the DDS module from accidental connections to HT voltages in valve radios.

We have also added a 10kΩ resistor in series, to limit inrush current in the case of a short circuit.

This offers the possibility of injecting the signal into HT-biased parts of the circuit but as we will see later, that is generally not necessary.

We've omitted the attenuated output terminal since you can adjust the sinewave amplitude output of the DDS via the touchscreen and you can also control the amount of signal coupling into the radio antenna by how closely you place the leads (more on that later).

We haven't bothered with any DC biasing of the output since that will generally be accomplished in the set if you are using direct signal injection.

In place of the trigger output used in the original DDS Generator project, we have an analog input that's intended to monitor the DC output of the detector or AGC (automatic gain control) signal.

This gives the unit direct feed-

**Fig.3: the modified main screen from Geoff Graham's DDS Signal Generator. Note the new "IF Align" button at centre left. You can still use the unit as a signal generator, with all the same functions of the original unit. We simply added the extra functions required for IF alignment, accessed via this new button.**

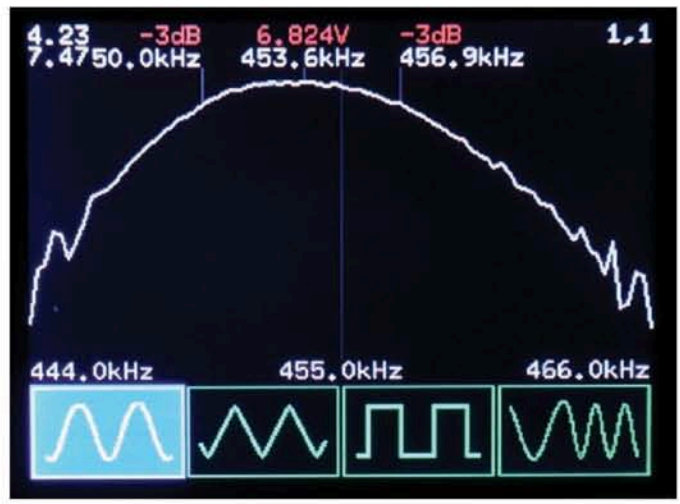


**Fig.4: we hooked our test unit up to an HMV 64-52 "Little Nipper" valve superhet and this is the result. The plot shows that the IF stage needs some re-alignment as its peak response is not at 455kHz. Note the cursors indicating the peak and (approximate) -3dB points. The output lead was simply placed near the ferrite rod antenna while the output of the detector was taken from the top of volume control pot VR1 (which doubles as the AGC signal, fed to R4).**

back on the amount of signal passing through the IF stage. This goes back to pin 24 on the BackPack since this is an analog input.

It's protected from accidental high voltage application via a 4.7MΩ series resistor and this also forms a divider with the 1MΩ resistor to pin 22, if pin 22 is actively driven.

If pin 22 is left floating by the software, it has little effect on the voltage at pin 24.

For radios which have a negative AGC/detector output (the majority), pin 22 is driven high, to +3.3V. This allows pin 24 to measure voltages down to -15.5V (3.3V x -1 x [4.7MΩ ÷ 1MΩ]).

To measure positive voltages, pin 22 can be left floating for high sensitivity (0-3.3V) or driven low for low sensitivity (0-18.8V) measurements. This is all under the control of the software.

We won't go into a great deal of detail on the operation of the AD9833 DDS module.

This was covered in a dedicated article in the April 2017 issue, starting on page 18 (see **www.siliconchip.com.au/Article/10608**).

It was also explained in the article on the DDS Signal Generator in the same issue.

In brief, software running on the LCD BackPack sends commands to the DDS module over a three-wire SPI (serial peripheral interface) bus comprising pins SCLK (clock), SDATA (data) and FSY (module select).

The same SPI bus is used to communicate with a digital attenuator in the same module, except that the CS (chip select) line is pulled low when communicating with it, rather than FSY.

By sending serial commands to the AD9833, the PIC32 in the BackPack can set the output waveform type (sine, triangle, square), the frequency (from 0.1Hz to 12.5MHz), the phase and it can also put the AD9833 IC into low-power sleep mode, or wake it up.

By sending commands to the digital attenuator, the output level can be changed in 255 steps, over a range of about 4mV to 1V RMS.

## Software operation

The software for this project is based directly on the software for the DDS Signal Generator from April 2017 and retains all the original features of that project.

We've simply added an "IF Align" button to the main screen (see Fig.3).

## Parts list – DDS IF Alignment

- 1 2.8-inch Micromite LCD BackPack kit with microcontroller programmed for DDS IF Alignment (DDSIFAlign.HEX), laser-cut lid and mounting hardware (Silicon Chip online shop Cat SC4021)
- 1 DDS Function Generator module with AD9833, AD8051 and MCP41010 ICs (Silicon Chip online shop Cat SC4205)
- 1 UB3 plastic Jiffy Box
- 4 M3 x 10mm Nylon machine screws
- 12 M3 Nylon hex nuts
- 11 short single pin female-female DuPoint jumper leads (Jaycar WC6026; set of 40)
- 1 USB charger with USB-to-DC-plug cable (see Fig.7)
- 1 chassis-mount DC barrel socket, to suit cable
- 2 chassis-mount BNC sockets
- 1 10nF 630V polyester capacitor
- 1 4.7MΩ 1W resistor
- 1 1MΩ 0.25W resistor
- 1 10kΩ 1W resistor

Once you've set up the generator to produce a sinewave at the expected intermediate frequency, press this button and the unit will go into sweep mode.

By default, it will sweep from 10kHz below the current centre frequency to 10kHz above (ie, a span of 20kHz). Each sweep takes a couple of seconds.

To do a sweep, the unit first sets the DDS output frequency to the lower end of the sweep range, then after a short delay, measures the voltage at the detector input. It then increases the output frequency by 1/80th of the span and measures the detector input voltage again.

Once it has at least two measurements, it updates the display with a short line segment, forming that portion of the IF curve plot.

This process is repeated until the frequency is at the top of the span (ie, after 80 steps) and the curve plot is complete.

The unit then repeats this process forever, so that the plot is constantly being updated.

Each time a sweep is completed, it analyses the data and finds the maximum value, then draws a cursor, which includes text that shows the peak frequency and voltage reading, plus a vertical line down to that part of the curve.

It then looks for the -3dB points on either side of this peak and if found, draws cursors for them too, including the frequency readings.

The mode buttons that are normally at the bottom of the screen in the DDS Signal Generator are still present in sweep mode, so pressing any of these will take you out of sweep mode and back into one of the normal signal generator modes.

Other areas of the screen can be touched to change the sweep parameters.

You can press on the centre frequency, at the bottom of the plot, to change it (a keyboard will appear). Similarly, touching either the lowest or highest sweep frequency in the bottom corners will let you set the frequency span.

If you press on one of the cursors at the top of the screen, you will change the cursor update interval.

Normally they are updated each time a sweep is completed but you can set them to change on every second or fourth sweep, to give you more time to read them off, by pressing on the cursors.

The first number in the top-right hand corner of the plot (before the comma) indicates the current cursor sweep update interval.

The second of these two numbers indicates the detector voltage input mode. The default mode is "1" which inverts the voltage measured and gives a maximum input reading of around -16V.

In this mode, the pin 22 output is driven high, in order to shift negative input voltages up into the range of 0-3.3V, so the micro can measure them.

Pressing on the middle of the screen will change this mode to "2", which sets the pin 22 output low.

Thus, the unit measures positive voltages, from 0V up to around +19V. Pressing again will change the mode to "0", which causes pin 22 to float and so

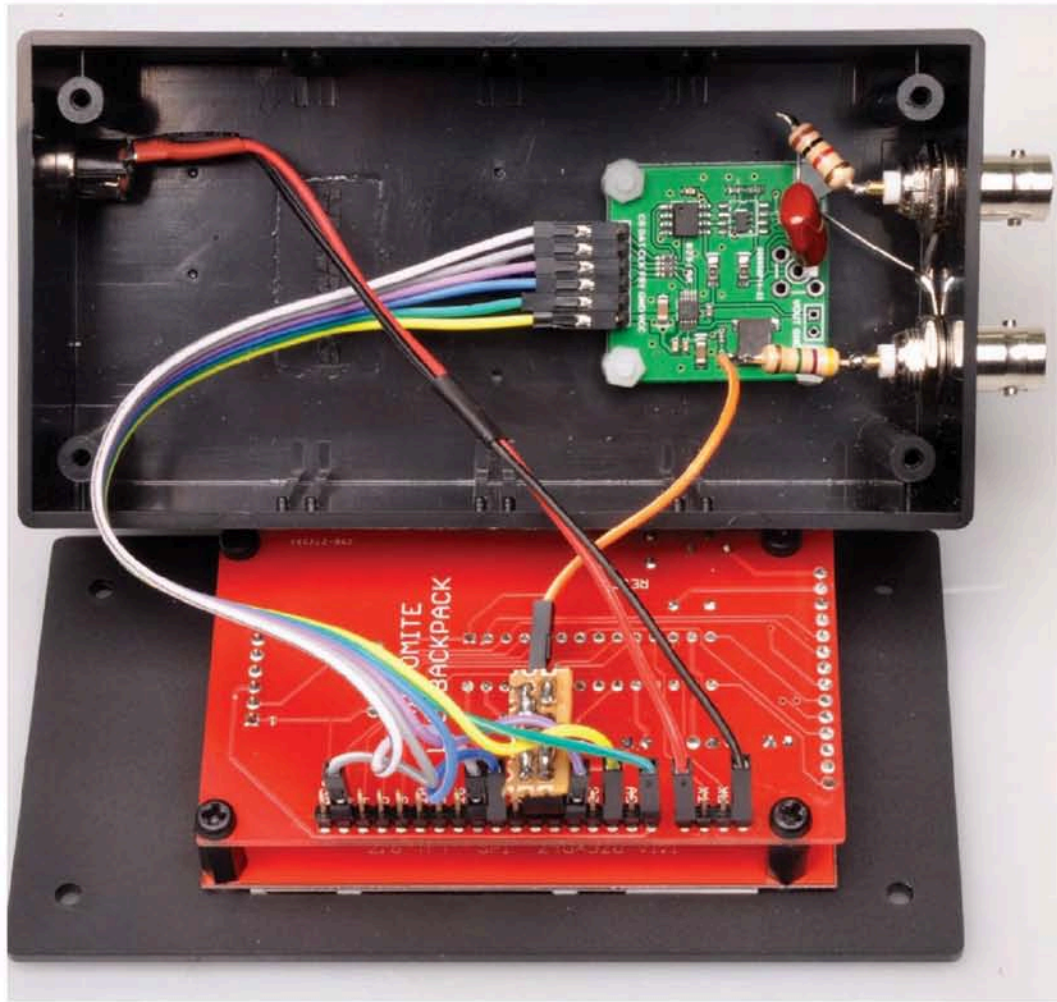

**Here's how it all fits inside a UB3 Jiffy Box, albeit with a new laser-cut acrylic front panel. The 10kΩ 1W resistor attached to the upper BNC socket appears to go to nowhere in this photo; in fact it is soldered to the 10nF capacitor immediately below it. Similarly the orange cable connecting to the BackPack solders direct to the end of the 4.7MΩ 1W resistor. Note also the small piece of strip board attached to the MicroMite BackPack PCB – we used this to more firmly anchor the 1MΩ 1W resistor which connects between pins 22 and 24 of the BackPack. Incidentally, 1W resistors were chosen not for their power dissipation but instead for their voltage ratings, assuming the DDS module will be used with the higher voltages of valve radios.**

the input voltage measurement range is 0-3.3V. Another press will take you back to mode 1.

The input impedance is around 5MΩ, regardless of mode.

Note that current does flow into pin 24 when making analog measurements and the high source impedance of 4.7MΩ, due to the series resistor, will cause errors in the readings.

But the whole measurement process is quite approximate, due to various factors such as AGC operation, imperfect coupling of the test signal into the set, non-linearity in the detector, background noise being picked up by the set's antenna (unless it is disconnected), etc.

In general, the measurements are close enough to get a pretty good plot of the IF stage's response and make any necessary adjustments.

## Construction

The majority of the assembly required for this project is to build the LCD BackPack module. This is available as a kit from the SILICON CHIP online shop.

You can use the plain BackPack kit (www.siliconchip.com.au/Shop/20/3321) and load the BASIC code for the DDS IF Alignment yourself, using a USB/serial adaptor and the free MMEdit software.

Or for the same price, you can purchase a kit with the software pre-loaded on the microcontroller from www.siliconchip.com.au/Shop/20/4021

Both kits are supplied with a laser-cut lid to replace the UB3 jiffy box lid, with the required cut-out and holes already drilled. The kits also come with the hardware needed to attach

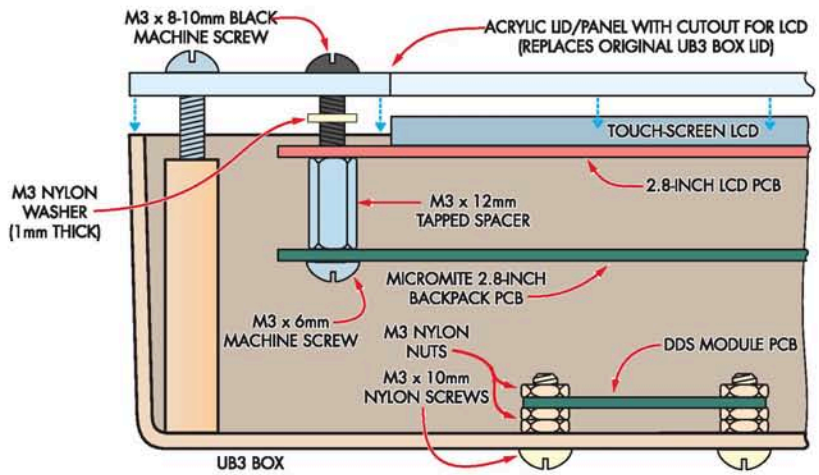


**Fig.5: this diagram shows how the LCD BackPack is attached to the underside of the 3mm laser cut lid, while the DDS module is mounted in the bottom of the jiffy box.**

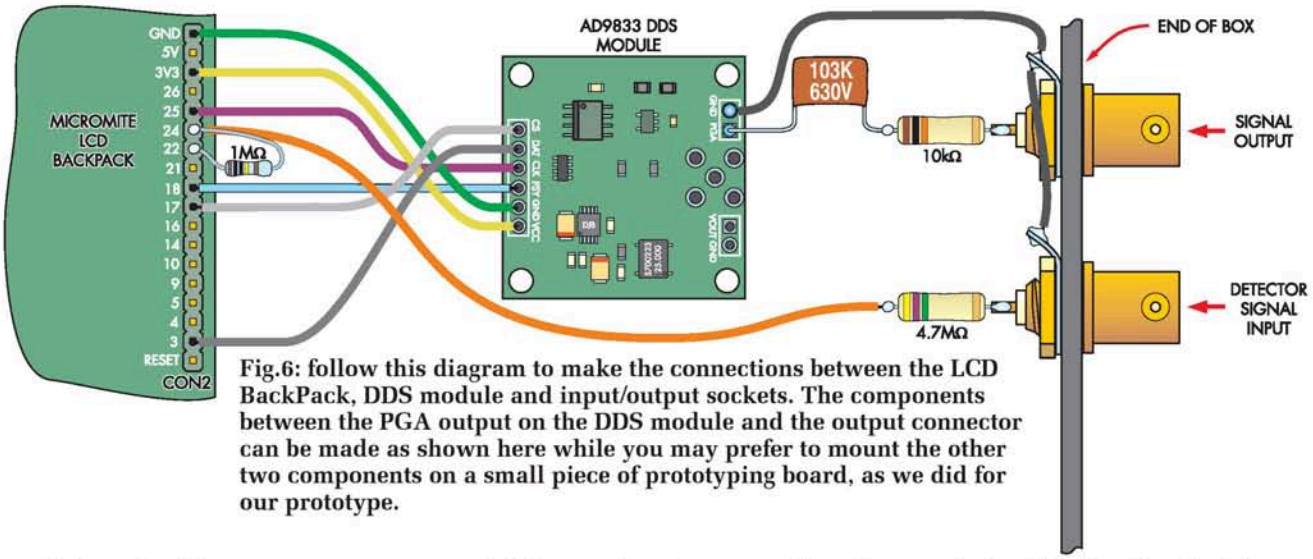


**Fig.6: follow this diagram to make the connections between the LCD BackPack, DDS module and input/output sockets. The components between the PGA output on the DDS module and the output connector can be made as shown here while you may prefer to mount the other two components on a small piece of prototyping board, as we did for our prototype.**

the module to the lid.

Assembly is quite straightforward, simply fit all the parts where indicated on the PCB silkscreen label.

For full details, see the February 2016 article describing the BackPack (**www.siliconchip.com.au/Article/9812**) but most constructors won't have any trouble figuring it out.

Make sure the 28-pin socket goes in with its notch in the position shown and when you plug the micro into its socket, its pin 1 dot needs to go near the notch.

The female header for the LCD and 6-pin right-angle in-circuit serial programming (ICSP) header both go on the same side as the micro and related components, while the two vertical male pin headers for the input/output connections are soldered on the back.

Regarding the three 10µF/47µF capacitors, note that they were shown as through-hole tantalum types in the February 2016 article, and you can use these, but we prefer to use SMD ceramics as they are more reliable and this is what is supplied in the kit.

The ceramic capacitors are not polarised and the PCB has pads to suit either type.

The kit is normally supplied with two SMD capacitors in one pack and one in another; the one by itself is the 47µF type.

However, it doesn't actually matter where you solder them since we only specified 47µF for VCAP in case tantalum capacitors are used.

When ceramic capacitors are used, 10µF is sufficient for all three. This has been a point of confusion for some constructors who have ordered kits.

Once the module is complete, power it up to make sure it works and then attach it to the underside of the lid with the supplied 1mm thick Nylon washers as spacers.

The touchscreen is held onto the main board by screws which pass through the lid, these spacers, the LCD module and then into the spacers mounted on the main board. The overall arrangement is shown in Fig.5.

## Final assembly

The next job is to place the DDS module in the bottom of the case and mark and drill mounting four 3mm holes, then attach it to the inside of the case using Nylon machine screws and nuts, as shown in Fig.5.

This module should be mounted towards the right-hand end of the case, around 60mm from the end, with the output connector to the right.

The only other holes you need to drill are two in the right side of the case for the BNC sockets (10mm) and one in the left side for the DC power socket (8mm).

You can then mount those sockets and solder the extra components as shown in the wiring diagram, Fig.6.

The easiest way to do this is to trim the leads of the 10kΩ resistor short and solder one to the central pin of the output socket.

One end of the 630V capacitor can be soldered to the PGA output of the AD9833 module before that module is installed in the case, then trim the remaining lead and solder it to the free end of the 10kΩ resistor.

The 4.7MΩ resistor can also be soldered directly to the centre pin of the input socket and then a short wire run back to pin 24 on the BackPack I/O header.

We made up a little plug-in board out of a piece of prototyping board, with the 1MΩ resistor onboard and a header for this wire to plug into so that we could easily remove it later if we

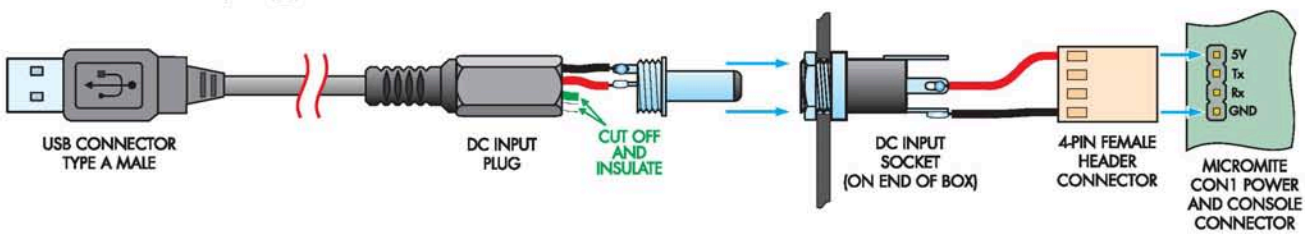


**Fig.7: this power supply cable is made from a USB cable cut short, with a DC plug soldered onto the end. It plugs into a USB charger, which is a cheap and readily available source of regulated 5V. The unit can also be run from a USB power bank or the USB port of a computer. The wires inside the USB cable should be colour coded; solder the red wire to the inner conductor, the black wire to the outer barrel and cut short and insulate the white and green (USB signal) wires.**

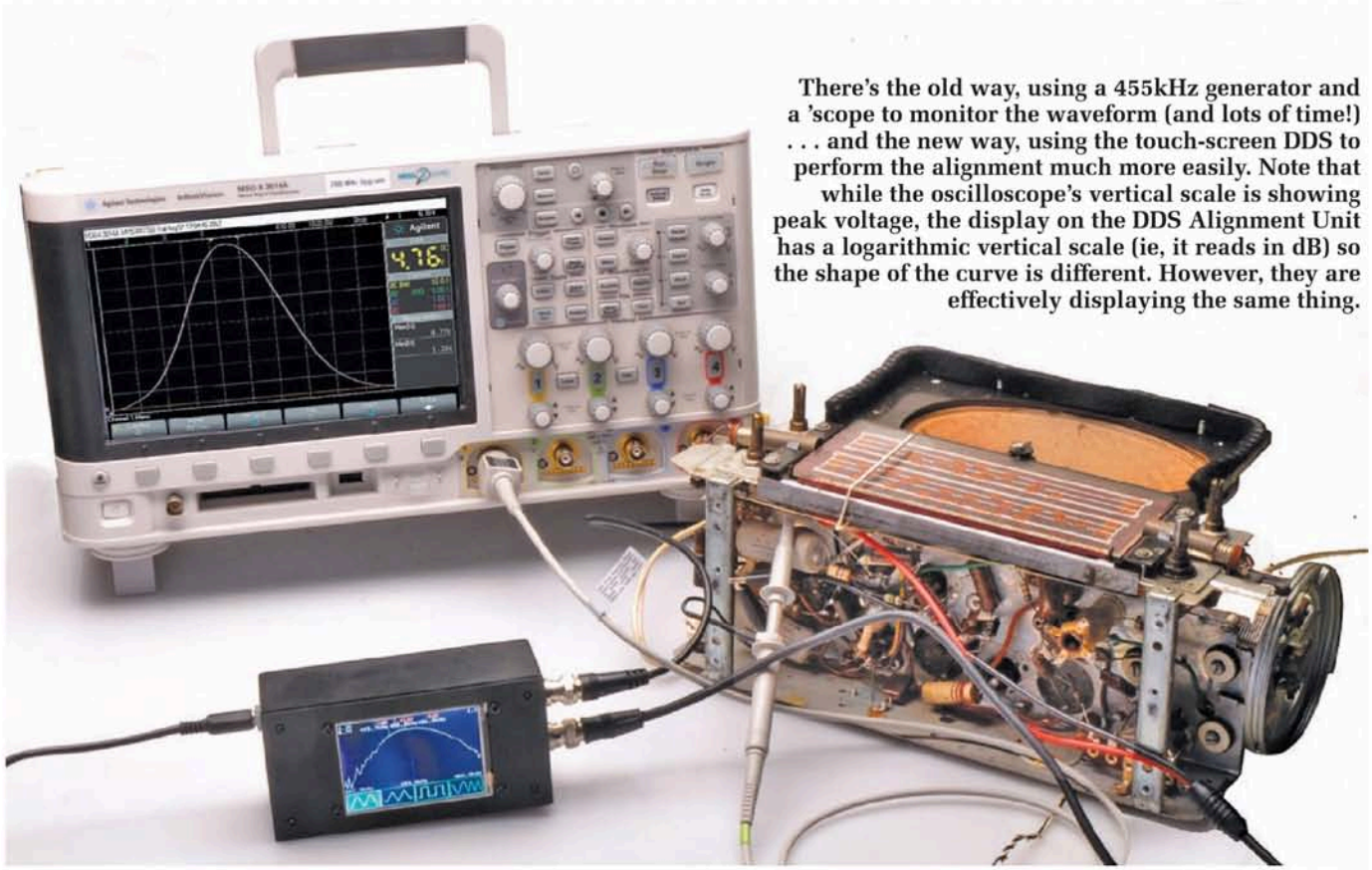

There's the old way, using a 455kHz generator and a 'scope to monitor the waveform (and lots of time!) . . . and the new way, using the touch-screen DDS to perform the alignment much more easily. Note that while the oscilloscope's vertical scale is showing peak voltage, the display on the DDS Alignment Unit has a logarithmic vertical scale (ie, it reads in dB) so the shape of the curve is different. However, they are effectively displaying the same thing.

needed to. You could solder the 1MΩ resistor directly between the pins to save time.

With the four extra components in place, all that's left to do is wire up the various connections using the jumper leads, as shown in Fig.6, plus the two wires to the DC socket.

Where you need to go from a header pin to a soldered connection, you can simply cut the DuPont socket off one end of the wire, strip it back and then solder it in place.

The other end can then just be plugged in; see the internal photo for more details.

Now double-check that you have wired up the DC socket with the correct polarity before powering the unit up because there's no protection against reverse polarity!

The easiest way to do this is to unplug the +5V connection from the BackPack board (check the silkscreen labelling to see which one this is) while leaving the earth connection attached.

Apply power, then measure between the disconnected pin and the outer shield of one of the BNC sockets with your DMM, with the black lead to the BNC socket shields.

If you get a positive reading on the DMM, close to +5V, plug the cable back in and the unit should spring into life.

Once you've verified that it's all working, you can attach the laser-cut lid to the case with the supplied self-tapping screws and the unit is complete.

Note that as the lid is slightly thicker than the one originally supplied with the case, and doesn't have recesses for the screw heads, it's possible you may need to substitute longer screws; we find the ones supplied with UB3 boxes from Jaycar are just long enough.

That's it, you are ready to start aligning radios. SC

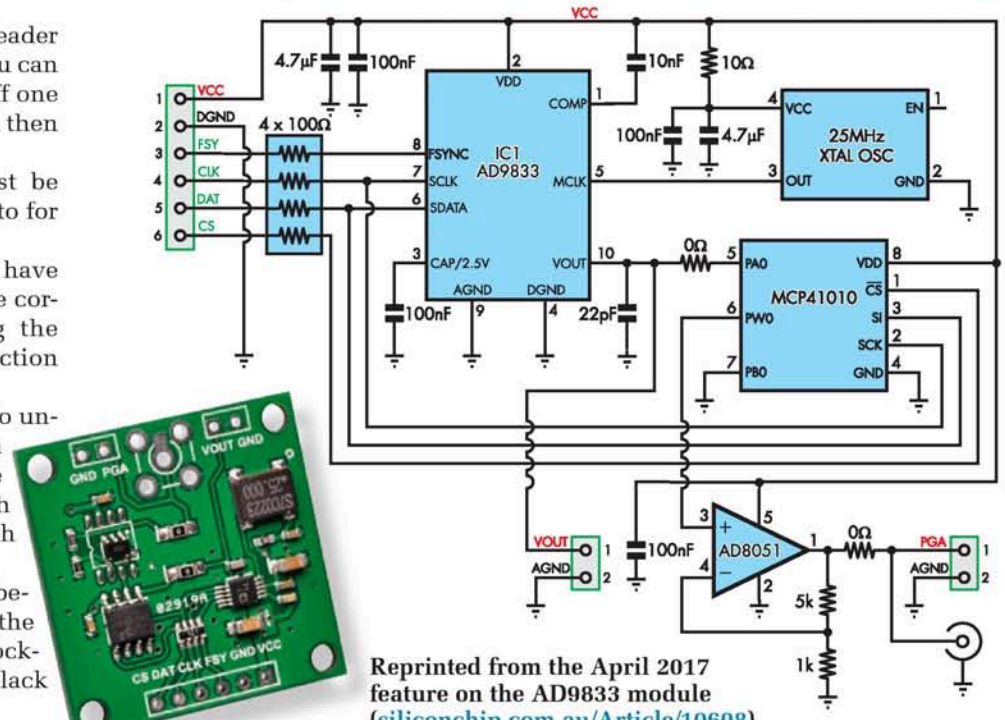





Reprinted from the April 2017 feature on the AD9833 module (siliconchip.com.au/Article/10608) this shows the circuit of the AD9833-based DDS module used in this project, The output is taken from the socket labelled PGA and AGND (lower right).

# SERVICEMAN'S LOG

## When a GPS loses its way

Dave Thompson*

**GPS satnav systems are widely used in cars, boats and for personal navigation when walking in country but it is safe to say that most of these would be discarded when they stop working. That is probably the most practical approach but what if you were using GPS tracking collars which are fitted to wildlife? These are much more expensive units that are quite costly to replace if they fail.**

### Items Covered This Month

- Garmin GPS animal trackers
- Cambridge CD player repair
- Fixing a useless machine
- A Pony 3 mobility scooter that just wouldn't scoot

*Dave Thompson runs PC Anytime in Christchurch, NZ.
Website: www.pcanytime.co.nz
Email: dave@pcanytime.co.nz

I am certainly getting a variety of work these days and I can no longer complain about doing the same "boring" sorts of repairs. I get all sorts of jobs and I wonder if it is because the servicing game has changed so much here in New Zealand. So many repair business have closed or maybe just given up. . .

I'll bet a lot of service businesses here looked at the silver lining when the quakes struck Christchurch, with many taking the seemingly God-given opportunity to close with dignity. There are few other explanations as to why so many of these businesses never re-opened. Some of us have kept going though...

A client from "down south" recently visited Christchurch and found me working on my new workshop. He'd heard that I fixed GPS units and asked if I was interested in looking at his. I told him that I'd repaired a few in the past few years as word got around that despite many industry claims, they might actually be fixable.

This guy was a typical kiwi "southerner" and I say that with a lot of respect. I mean that he is one of those characters that spends much of his life in the far south of the country, where bush is thick, the terrain harsh and the weather beyond inclement. There are still uncharted areas down there, and this is my client's backyard.

Having the GPS working properly could be the difference between coming home safe or spending a night (or longer) out in the boonies, so they are an important piece of kit.

What he wanted me to check over was a Garmin hand-held GPS unit and three Garmin Alpha T5 tracking collars, the sort you might fit to a lion or a bear in order to keep tabs on their whereabouts. They are certainly not the dainty "domestic" types sold by the likes of AliExpress for pet owners to monitor Snuggles' nocturnal antics.

My client uses these collars, together with the hand-held GPS, to monitor animals in the wild and gather information about their movements so that

programs can be devised to ensure their continued survival.

The collars are made using heavy-duty synthetics, hard rubber and some metal parts for the clasp arrangement, all of which have to be robust enough to withstand natural hazards and the animal's efforts to rid itself of the annoyance.

Apparently, all of these collars had failed with the same symptoms; they no longer acquired satellites and were thus useless for tracking.

Due to the cost of replacement, the guy thought he'd ask around to see if anyone fixed them and for some reason, my name popped up. However, there was a snag (isn't there always?). Garmin made these collars to withstand the rigours of extreme conditions; to that end, they are built like the proverbial masonry ablutions block.

The external connections are well-sealed with some formerly-liquid armour and the GPS module – which is housed a separate small plastic "box" along the collar from the main electronics case and connected by a shielded cable – is completely enclosed in a case with clear potting compound and thus completely isolated from the environment – and potential repairmen.

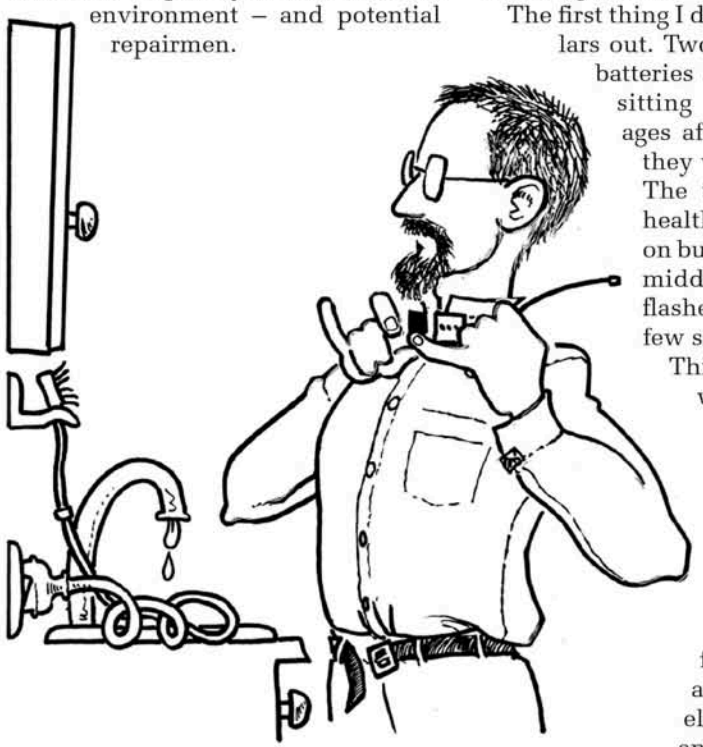

THE FIRST THING I DID WAS TRY THE COLLARS OUT

The main box of electronics goodies is three times the size of the GPS module and is home to the battery, charging ports and a small, double-sided PCB stuffed with surface-mounted components and edged with tiny, multi-colour LEDs that indicate what's happening with the unit.

At least this board is accessible after removing half a dozen long, fine-threaded screws and prying the lid away from the seal that (supposedly) keeps the contents safe and dry.

The guy mentioned that he, and others with the same issue, thought the problem was the shielded cable from the GPS module and commented that it was often under some strain, so they thought all it needed was re-terminating into the main module. Or at least that's what YouTubers and posters in online forums reckoned.

Just by looking at it, I doubted this was the issue. The cable was embedded in the plastic collar and appeared well-connected, with all the strain relief necessary. And given that it really didn't flex or move that much when the collar was worn, I found it difficult to accept that this was the problem. We'd see though; I've been known to be wrong before.

The first thing I did was try the collars out. Two of them had flat batteries since they'd been sitting on the shelf for ages after failing and so they were non-starters. The third one gave a healthy series of beeps on button-push and the middle of three LEDs flashed solemnly every few seconds.

This informs the user when enough satellites are acquired for accurate operation; one flash is no satellites; two flashes indicates two satellites and three flashes indicates at least three satellites are acquired and this will provide the most accurate positioning.

The problem with this collar was that it wasn't acquiring any satellites at all; the LED only blinked once every few seconds.

My initial thought was that perhaps the guys were right in thinking that the GPS module's lead had come adrift. It would certainly explain the lack of satellite acquisition. This would be well worth checking out anyway, if not to confirm the diagnosis, then at least to rule it out.

I decided to start with the one that powered up; I could use that battery to check the others as the client neglected to bring the specialised charging dock for the collars. Once I had the battery out I could use my bench supply to top it up if necessary.

I started by removing the six screws holding the main module together. Two of those screws hold a smaller, separate cover and another, smaller machine screw and two tiny PK-type screws beneath that held the GPS module's connection harness to the main module.

With those smaller screws removed, the end of the collar and the embedded GPS module's shielded cable could be pulled away from the main module. But not very far; the portal where the shielded cable enters the main module is heavily potted and the material is somewhat elastic, but very tough.

The VHF antenna, which is about 350mm long and follows the contour of the collar due to it feeding through various holders, is basically a chunk of heavy gauge, multi-strand steel cable with a basic crimp terminal at the module end and a red, plastic antenna tip at the other. This connects to the main module via a relatively large machine screw but this isn't potted in and is easily removed.

With all the screws and bits removed, I used a small flathead screwdriver to gently pry the metal frame out of the main module's thick plastic body. It fits very tightly and aside from a few animal hairs and some dried mud, it came out cleanly, revealing two plugs from the board; one to the battery and one to the charge port, which were screwed and moulded into the main plastic housing respectively.

Once unplugged, the PCB came away with the metal base, and I could see the PCB was attached to the base with a few more of those tiny PK screws and stuck with potting compound in several places.

The first thing I noticed was a lot of grub between the VHF antenna terminal and its connector into the module. As I said, that end of the antenna is not potted in and only has an unsealed, thin plastic cover over it in the wild, allowing moisture and other debris to work its way in.

I cleaned the terminal with some isopropyl alcohol on a rag and used my 30-year-old contact-cleaning diamond file to clean the face that contacted with the one in the module. The module side of things was a little dirty but looks to be nicely polished or even chromed steel, so I didn't file that. Instead, I used my fibre-glass-bristled PCB cleaning brush to spruce it up.

Looking further onto the PCB, I could see that moisture had gotten into this one. There is a rubber O-ring type seal between the metal base and the plastic body of the main module and it looked to be intact, so I'm not sure how the moisture got in, but it had started to corrode some of the solder joints on the board.

Once again, I used my PCB brush to clean the board and with a very fine tip in my soldering iron, I went through and tidied up every dodgy-looking connection on the board before setting that aside and checking out the GPS module.

The GPS module had a plastic bottom, which was held on with four small screws. Once removed, the base came away easily, revealing a completely potted PCB board taking up the whole interior space. The connecting cable exited via a purpose-made channel in the collar and entered the potting material, which was clear, so I could see the cable gently curl around and end up soldered to the PCB.

This cable was also heavily potted in at the main-module end, so it wasn't easily accessible for ringing out. It needed to be tested for continuity though, if only to prove or disprove the client's theory that it was the problem.

The easiest way to do this was to drill a small hole through the potting material down to the joints on the PCB. I used a standard 1.5mm "jobber" drill to start with, drilling slowly down by hand with a pin chuck until I was nearly to the joint, a distance of about 5 or 6mm.

I finished off with the same-sized drill, but with the bevels ground off, making it flat-bottomed. This I twisted in until it just touched the soldered joint. Luckily, the refracted light didn't throw me off the mark, as it certainly looked odd from certain angles as the drill went in.

I then used my dentists' pick to clear the way for one of my multimeter leads and after touching one lead on that, went to the main module's board and used the other lead to "ring" out the shielded cable.

Although the main board end was also potted over, I could touch various parts of the board and get readings, and on the grounded side, could make a one-to-one contact with earth points on the main board, even when twisting and manipulating the cable at either end, so that confirmed to me that this cable was not the problem with this collar.

I refilled the holes I'd drilled in the potting compound with 5-minute epoxy and though probably not as tough or hard as the original, for filling a 1.5mm x 6mm hole it was sufficient for air and moisture protection.

I assembled the VHF antenna and plugged in the battery – which by this time I'd removed from the housing – pushed the ON button and took the whole caboodle outside and sat it on the rag top of my car. Within about 30 seconds, it was double-flashing and by one minute, was flashing three times, indicating that at least three satellites had been acquired.

When I fired up the handset and selected one of the dogs listed, two didn't show any data, though the third indicated a stationary distance of two metres, and when I moved the collar to the end of the driveway, twenty metres. That was good enough for me, so I reassembled everything bar joining the main housing and metal base together; I'd need the battery for testing the others.

The second collar was pretty much a replay of the first; cleaning up all the connections resulted in another working collar. The client was well pleased, and at this stage mentioned there was a YouTube video of a guy fixing one of these collars with the same symptoms as ours. I had a look, and that guy simply replaced the GPS module with a new part, which was overkill in my opinion.

The third collar defeated my attempts at basic repair and I think the GPS module has really gone in that one. I'm currently stripping the potting compound out of it. After all, I've nothing to lose by doing that and I think I can pick up a suitable module for a lot less than the YouTube guy paid. We'll have to see.

## Repair to Cambridge Audio 640C CD player

As a tinkerer living in a small country town, I get asked to look at various non-operational devices. A friend recently asked me to look at her CD player.

I have had a few CD players requiring a lens clean, but as the front panel showed that it was reading the info off the disc, that wasn't the case here. There was a signal at the digital output socket, but nothing at the analog audio output sockets.

I found a circuit diagrams on the web which showed that there was a relay which could mute the output. There was no "mute" button on the unit or the remote control so it wasn't going to be that easy.

The relay was a 5V DC coil unit and checking around, I found a mute connection (CN4) on the board near the relay. This had either five or zero volts on it depending on whether play or pause/stop was pressed. I (stupidly) jumped to the conclusion that the relay coil must be open. I ordered a suitable replacement, but of course replacing the relay made no difference.

Searching around on the board, I noticed that four capacitors appeared to have leaked brown gunge onto the board. I could only get higher voltage rated versions so one of them had to be fitted horizontally on long leads. I half-hoped this might make a difference to the voltages, but the relay was still not operating.


## Servicing Stories Wanted

**Do you have any good servicing stories that you would like to share in The Serviceman column? If so, why not send those stories in to us?**

**We pay for all contributions published but please note that your material must be original. Send your contribution by email to: editor@siliconchip.com.au**

**Please be sure to include your full name and address details.**

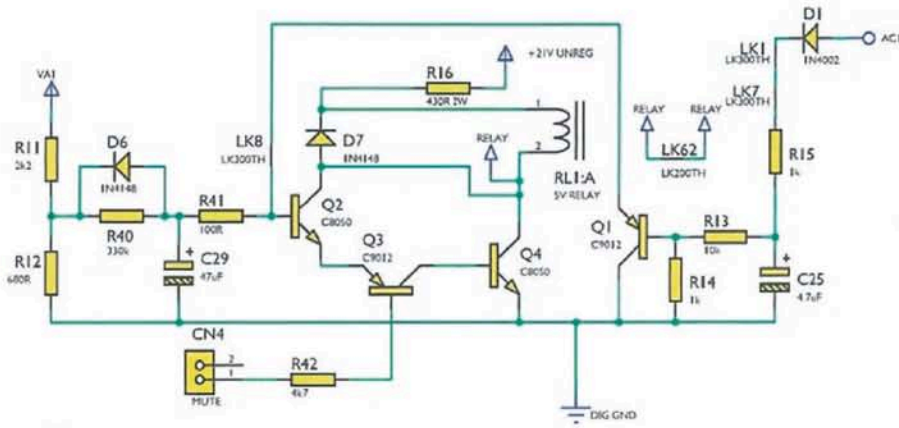


**Partial circuit diagram for the Cambridge Audio 640C CD player showing the output mute control, as described in the text.**

The diagram showed a circuit with four transistors associated with the mute relay. I tested these and they all appeared OK.

To try and work out what was going on, I soldered a few flying leads around these transistors so that I could monitor voltages while the unit was operating. I realised (a bit late) that the mute 5V signal was present when the relay should be off and zero when it should be on.

This meant that the circuit must invert the mute voltage. I finally traced the fault to R11 which was difficult to find as it was covered in brown gunge from one of the capacitors. It was difficult to test in circuit as it effectively had a large capacitance in parallel, but it was open.

I did not have a 2.2kΩ resistor handy but a 1kΩ and 1.2kΩ in series worked as a replacement. This fixed the problem and it was reassuring to hear the relay click on and off and get audio via the sockets on the back.

After removing my flying leads and reassembling, I checked that all was still operating. My friend was very happy to have her music back, but since I had deprived her of it for so long (waiting for parts to arrive and putting it aside out of frustration), I felt I couldn't charge her anything.

I might have saved time and frustration if I had done some better testing at the start and applied (correct) logic.

## Pony 3 mobility scooter

J. W., of Aspendale, WA, was recently asked if he could repair a connector on his friend's mobility scooter so naturally he agreed to have a look at the machine. . .

My friend said that the scooter was not going as fast as it used to. He had been fault-finding the problem over a period of time and had isolated the fault to a 2-pin Molex connector. So he delivered the scooter and we set it up in the workshop. I removed the cover from the controller and checked the "faulty" connector. It seemed to be OK but I gave it a clean anyway.

With the scooter out of gear, we were able to hear that the motor was still not revving fast enough, although at one stage it did rev up for a short period. I traced the wiring from the 2-pin connector and found that all it did was connect the ignition switch to the controller PCB. So it seemed highly unlikely that this would have any effect on the speed of the scooter.

I suggested that he leave the scooter with me and I would investigate further. I could not find any service information on the 'net so decided to check the obvious and hope to find a cure.

The speed was controlled by two potentiometers: a throttle control with levers for forward and reverse and a speed control potentiometer which set the maximum speed.

I disconnected and removed the throttle controller which looks like a rectangular potentiometer. I found on the 'net that this was called a wig-wag controller with a self-centring position that was supposed to give a resistance of half the total. The wig-wag controller was marked as 5kΩ and it measured 5kΩ between the two outside terminals.

I then checked between the outside terminals and the centre one. The reading showed a variation of approximately 2.5kΩ when the controller shaft was moved in each direction. I assumed that this was OK so put it back in circuit.

I then unsoldered the speed controller pot and checked it with a multimeter. The pot was marked 20kΩ and started at a reading of 20kΩ at the low speed end of its travel.

The resistance reduced as I turned it to a higher speed position but as it reached about ¾ of the travel, the reading reverted to 20kΩ and stayed there. So with the pot turned up to maximum speed it was giving a resistance associated with low speed and not the zero ohms I was expecting.

I only had a 50kΩ pot on hand so I connected it up and found that the motor now started at low revs and increased to quite a high speed with the pot turned to zero ohms, the maximum speed position.

So it was off to my local parts supplier to get the correct replacement for just $2. Once it was installed and everything put back together, I did a few laps of the garden to prove it was

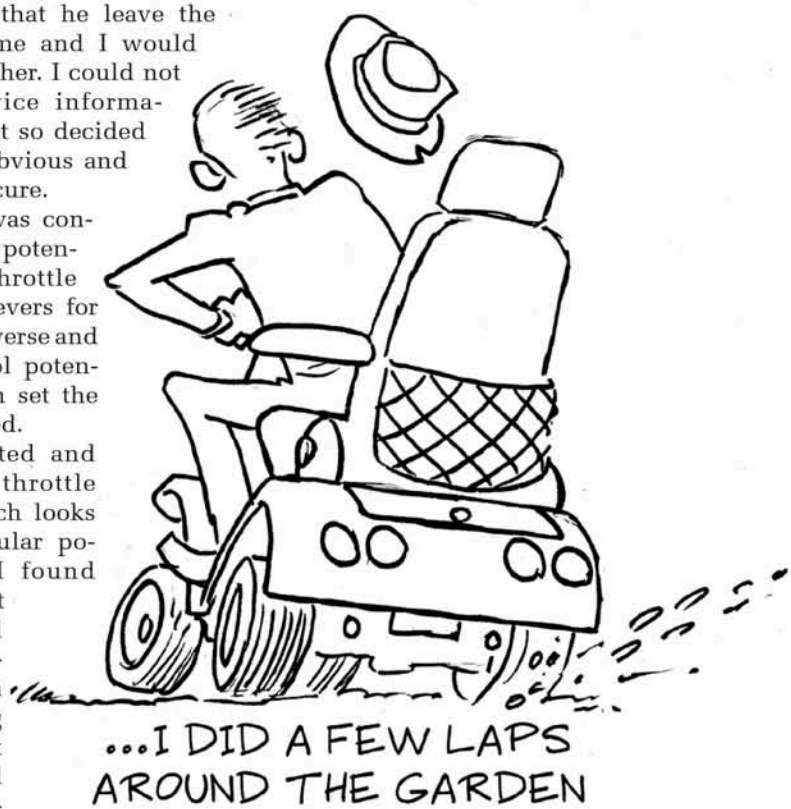

all OK. My friend was delighted as he had been quoted over $200 to have it looked at by the supplier.

## Fixing a useless machine

J. G., of Princes Hill, Victoria is having fun in his retirement, reliving those halcyon days when he made model planes and played around with electronics. He takes up the story. . .

My most recent project has been to make a "useless machine", invented by Marvin Minsky at MIT in Boston. The first prototype seems to have been built in the 1950s by Claude Shannon, the pioneer of information theory.

A useless machine consists of a box with an on/off toggle switch on top. When it is turned on, a hand emerges and turns it off. That's all it does. You can buy useless machines from Jaycar, but I wanted to make one that is even more useless! It would be more creepy if the hand emerged very slowly but snapped back into its box the moment it hits the switch.

Servo motors used to control model planes are ideal for this purpose. They consist of a small brush motor and a set of reduction gears which actuate a "control horn" linked to the rudder or ailerons.

The servo is controlled by a stream of pulses, the width of which sets the position of the control horn. Typically, a pulse width of 1.5ms sets the horn at a midway position; a pulse of 1.0ms moves it to one extreme and 2.0ms to the other extreme.

It was relatively simple to devise a circuit using a CMOS version of the ubiquitous 555 timer IC, where the pulse width is smoothly increased by a slowly rising voltage on the control pin, causing the hand to emerge slowly, followed by a sudden return to a short pulse, putting the hand back into the box.

Preliminary testing without the motor connected showed that the circuit worked well, but *the best laid schemes o' mice an' men gang aft agley*. With the servo connected, the hand oscillated wildly and randomly back and forth.

This problem is well known in the radio-controlled plane fraternity, and is known as "servo chatter". It didn't take long to confirm that it was caused by noise from sparking motor brushes. Somehow the motor noise was getting into the control circuit but a variety of measures including ferrite beads in the motor wires and a 2000µF capacitor across the battery made no difference.

Old-timers will remember a common problem that used to affect valve radios, aptly known as "motor-boating"; characterised by a loud put-put-put-put in the speaker. These days it is sometimes seen in valve guitar amplifiers.

Motor boating is caused by feedback between the power output stage and earlier voltage amplifier stages via the high voltage supply line. Badly designed circuits can be prone to motor boating but it is typically caused by a faulty electro.

Motor boating is commonly prevented in the design stage by decoupling the early stages from the power stages, by using a simple RC filter in the high voltage line to prevent fluctuations in the supply line feeding back into the high gain voltage amplifier stages. Could decoupling solve my problem with servo chatter?

The motor and the control circuit were fed from a 6V battery. Measurements showed that the servo motor drew a wildly fluctuating current with peaks of well over an amp and the scope confirmed that the supply voltage jumped up and down randomly when the motor moved. The control circuit only consumed 2mA. How about decoupling?

All it took was a 220Ω resistor followed by a 1µF MKT capacitor to earth. The control circuit still worked perfectly with less than half a volt drop in supply voltage, but the servo chatter disappeared completely. Now when the hand moves out slowly and creepily, and snaps back instantly, it always provokes fits of laughter in young and old.

Incidentally, while the labelling on the switch in the accompanying picture may look incorrect, it is not. The switch is pictured in the ON position. The hand pushes the switch to the OFF position. In the "resting" situation, the servo arm presses against an invisible microswitch, keeping it in the OFF state. The microswitch is in parallel with the visible switch but is not seen in the photo, such that no power is delivered to the electronics or the motor.

The hand is activated by moving the switch to the ON position. This supplies power to the electronics and the motor.

The hand slowly moves forward, such that the microswitch is now turned on. The hand moves out of the box, pushing up the lid, and pushes the visible switch to the OFF position. The hand then moves quickly back to the inside of the box, where a hidden protrusion presses on the microswitch and turns the power off.

There's more to it than meets the eye! SC

**A useless machine is a functional device that serves no useful purpose. This example was designed such that when switched on, a hand will come out and turn the switch off; using a servo to provide the hand with a variable speed.**

# LTspice Modelling an NTC thermistor

Part 3:
by Nicholas Vinen

**Last month, we designed a relay simulation and added it to our SoftStarter circuit. But to completely simulate the SoftStarter, we need an NTC Thermistor model and LTspice has no such model. Well, there's only one solution. . . make one! In the process, we'll learn a lot about designing simulation models and design some very handy building blocks that can be re-used later.**

A **thermistor is** a non-linear resistor which changes in value as the temperature changes. The resistance of an NTC Thermistor varies inversely to the temperature. In other words, its resistance drops as it heats up.

High power NTC thermistors are useful for reducing inrush current, especially in mains-powered circuits, as they have a high enough initial resistance to limit the current drawn by capacitor-input power supplies and motors, but a low enough resistance (once they warm up) that they don't interfere with the load's operation and don't waste much power.

We took this a step further in our SoftStarter, published in the April 2012 issue (www.siliconchip.com.au/Article/705). By building a circuit which shorts out a current-limiting thermistor with a relay a few seconds after mains power is applied, we get the best of both worlds; once the relay activates, the power loss in the thermistor is zero. The circuit for that project is shown here, in Fig.1.

Developing that circuit took some trial-and-error as we had to build it and assess its performance in order to tweak

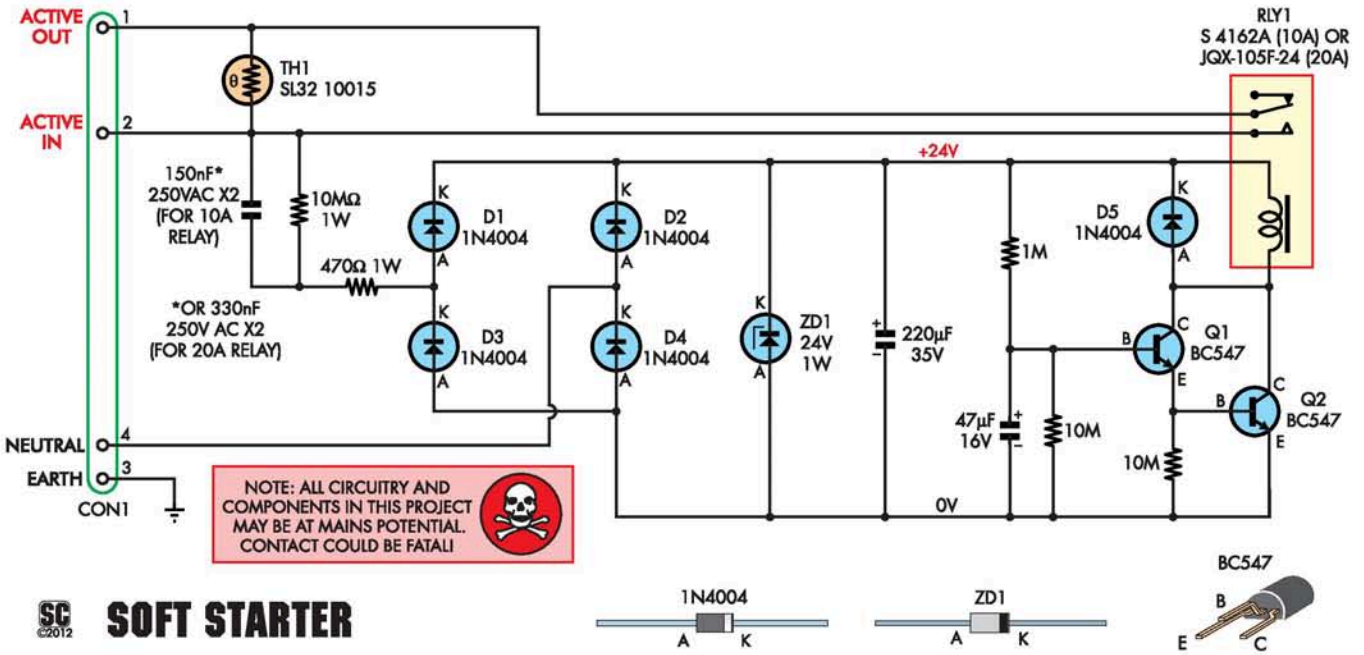


**Fig.1: the original circuit from our SoftStarter, published in the April 2012 issue. This reduces inrush current to the connected device each time mains power is applied. This was revised to add load current sensing in the Soft Starter for Power Tools, in the July 2012 issue but this month we're simulating the more basic circuit shown here.**

the component values. If you look at the original article, we published some simulation curves showing how an NTC thermistor can be used to reduce inrush current. So why didn't we simulate the circuit before building it?

It was because SPICE does not have built-in support for any kind of variable resistance device, which would allow us to simulate the behaviour of an NTC thermistor. But it is possible to build a (fairly complex) sub-circuit to do the job instead and this article will show you how.

The variable resistance is created using two high-voltage Mosfets in series, connected source-to-source, with their gates joined together. They are then shunted with a resistor, setting the maximum resistance of the device. The minimum resistance is determined by the properties of the Mosfets and how their gates are controlled.

The reason for using two Mosfets is to prevent body diode conduction in one direction, as the body diodes are facing in opposite directions. Since their gates and sources are joined, they both must always have the same gate-source voltage, so they are simple to control and the on-resistance of the combination is simply twice the on-resistance of a single Mosfet.

Note that SPICE generally does not model the body diode conduction in a Mosfet. To simulate a realistic Mosfet, you may need to connect a zener diode across it, with the zener voltage equal to the avalanche breakdown voltage of the Mosfet you've chosen.

But just in case SPICE decides to get clever and simulate avalanche breakdown for us, our back-to-back Mosfets will work just like they would in reality, preventing current from flowing unless they are both switched on.

Before we proceed, please note that all the sub-circuits, symbols and test circuits shown in this article are available for download in a ZIP package from the SILICON CHIP website (free for subscribers). So you may wish to download this and "play along" with the tutorial. You can easily experiment with the circuits, changing values and seeing the effects.

## Building the control circuitry

So that's how we're going to provide a controlled resistance but that leaves a rather complex problem to solve, which is how to actually produce a Mosfet gate voltage to give a resistance which varies depending on the simulated temperature of the NTC thermistor. We need a way to track dissipation and average/accumulate the instantaneous power to determine the temperature, then use this to vary the resistance.

The simulated temperature also needs to drop over time when dissipation is low, simulating the normal cooling process and that temperature needs to translate into an appropriate voltage to drive the Mosfets, to achieve the right resistance value for a given simulated temperature.

Broadly, our solution is as follows. We charge a capacitor via a diode and resistor to simulate thermistor heating. The voltage across this capacitor will represent the temperature. A resistor across this capacitor will simulate cooling to ambient temperature.

We will then amplify and level-shift this temperature-proxy voltage and apply it to the Mosfet gate, and adjust the amplification factor and RC time-delay constants until the result closely matches the behaviour of a real thermistor.

To charge the capacitor representing temperature, we need a voltage that's proportional to the instantaneous dissipation in the thermistor and this can be calculated as the product of the voltage across and current through the thermistor. That sounds simple but it isn't easy to arrange in SPICE.

For a start, heating does not depend on the polarity of the voltage or the direction of the current so we need to compute their absolute values before multiplication. And unfortunately, there's no easy way to multiply two voltages in SPICE. So we have to build an analog multiplier circuit for this job.

## Measuring voltage and current

The complete sub-circuit for our thermistor simulation is shown in Fig.2, with its corresponding symbol at top. In the lower left-hand corner, you can see our two back-to-back Mosfets, M1 and M2, with 10Ω resistor R1 across them. We have chosen 10Ω since this matches the nominal cold resistance of the SL32 10015 type NTC thermistor used in the SoftStarter.

We are using IPB200N25N3 Mosfets because they have a high voltage rating along with a low $R_{DS}(on)$ of 20mΩ. Since they are in series, this gives a minimum thermistor resistance of 40mΩ. The SL32 10015 typically measures 48mΩ at the full rated current of 15A, with its body temperature at 228°C.

It doesn't matter that the Mosfet resistance is slightly lower since the whole sub-circuit incorporates feedback and it will adjust the Mosfet gate voltage to achieve the required resistance, to keep the body temperature steady for a given current. The Mosfets just need to have a low enough $R_{DS}(on)$ to be able to give the required current.

We have placed a voltage source, V1, in series with the simulated thermistor. It is set to 0V DC. It might seem weird to have a voltage source of zero volts but voltage sources also double as current meters in SPICE. So V1 is used to measure the current through

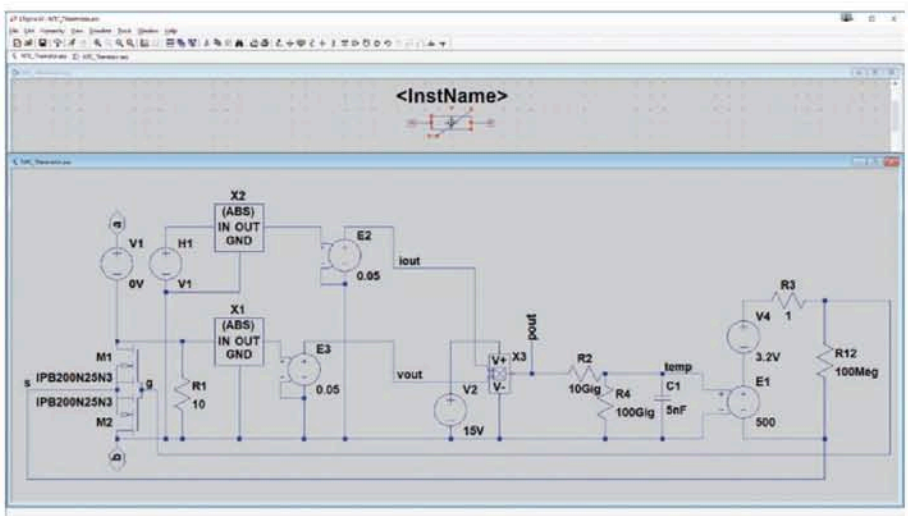


**Fig.2: our complete NTC thermistor simulation sub-circuit, along with its symbol at top. X1 and X2 are precision rectifiers while X3 is an analog multiplier that calculates the instantaneous dissipation of the simulated thermistor. This is accumulated in capacitor C1 and the voltage across it is ultimately applied to the gates of Mosfets M1 and M2 to control the transconductance appropriately.**

the thermistor. Note that the points labelled "a" and "b" are the ports used for external connection to the thermistor.

H1 is a current-controlled voltage source and you can see that its value field is set to "V1". As a result, the voltage across H1 will track the current through V1, ie, with 1A through V1, there will be 1V across H1; you can change the ratio but in this case, the default of 1A:1V is fine.

We then feed the output of H1 to sub-circuit X2, which produces an output that is the absolute value of the voltage at the input. Similarly, the voltage across the thermistor is fed to another absolute voltage sub-circuit, X1.

## Calculating absolute voltage

The sub-circuit to calculate the absolute value of a voltage is shown in Fig.3. It's quite straightforward.

In the real world, this is typically done with a "precision full-wave rectifier" comprising two op amps, two diodes plus some resistors. The op amps cancel out the forward voltage of the diodes. We could simulate such a circuit, however, it would slow the overall simulation down as it would have to simulate two op amp ICs plus a bunch of other components.

So we came up with this much simpler circuit using just two voltage-controlled switches (S1 & S2) and two voltage-controlled voltage sources (E1 & E2).

Both E1 and E2 are set for a gain of unity ("1"), with the input voltage and ground connected to their + and – inputs respectively. So essentially they are just buffers. But because E1's output is floating, if we hook up its output terminals in reverse, it acts as a voltage inverter.

Both switch models are set up so that the switch is on its input is positive (ie, positive input voltage higher than negative input voltage). The threshold for S2 is 1µV higher than S1, to prevent them both conducting if the input voltage is exactly 0V.

So if the input voltage is positive, S1 connects the buffered signal from E2 directly to the output terminal. And if it's negative, the output of E1 is positive and this is instead connected to the output terminal.

You can see the simple symbol we came up with for this sub-circuit at the top of Fig.3. The test circuit is shown in Fig.4, with the results of the simulation shown above. The input is a 3V peak-to-peak sinewave offset by 0.5V and shown in green. The output is shown in blue. As you can see, the output is a perfectly rectified version of the input.

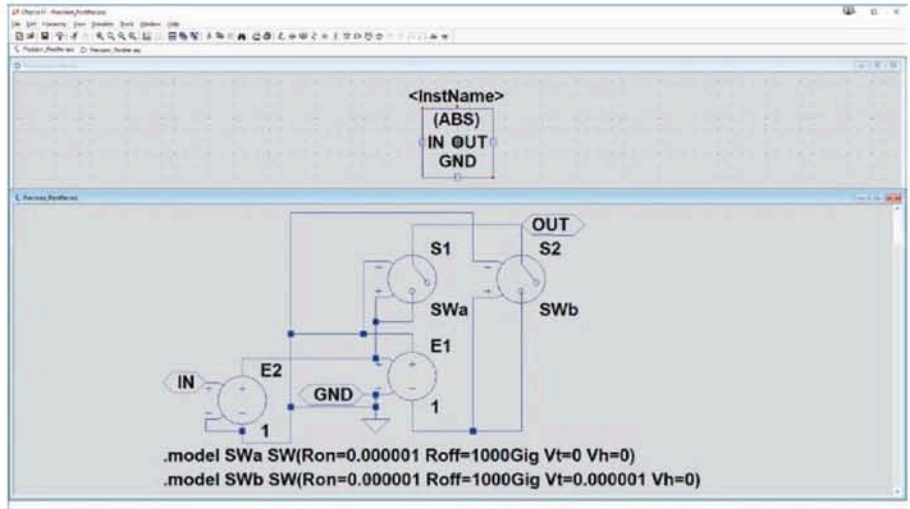


**Fig.3: our precision rectifier sub-circuit is quite simple; it either applies the input voltage (buffered by E2) to the output, via voltage-controlled switch S1, or if the input is negative, it is inverted by voltage-controlled voltage source E1 and this positive voltage is applied to the output instead.**

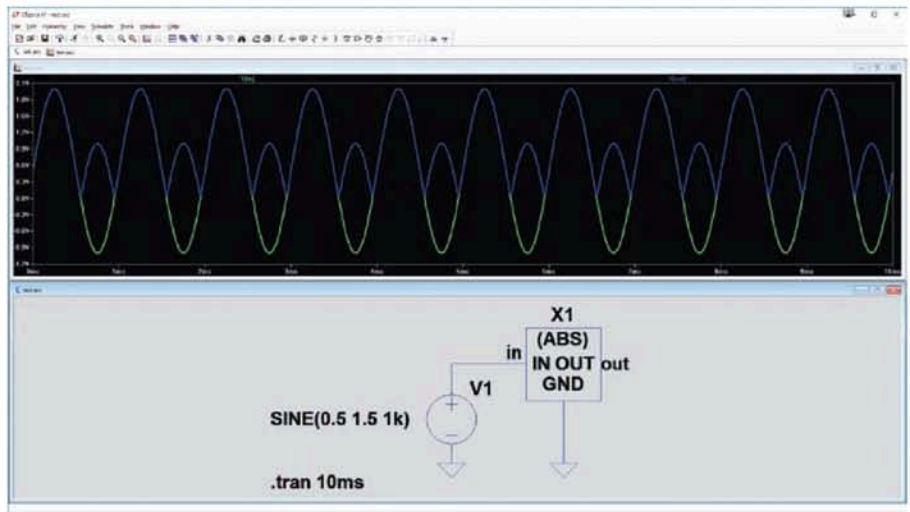


**Fig.4: test circuit for the precision rectifier, which shows a sinewave with a DC offset in green overlaid with the output of the rectifier, in blue.**

## Tracking instantaneous power

So, the outputs of X1 and X2 shown in Fig.2 are a rectified (always-positive) version of the voltage and current across the simulated resistor respectively. Both voltages are referenced to the bottom end of the thermistor (terminal "b"), which is effectively the ground for this circuit. As a thermistor is only a two-terminal device, it must "float".

The outputs of X1 and X2 are fed to voltage-controlled voltage sources E2 and E3 which both have a gain of 0.05, ie, they attenuate the voltages by a factor of 20. This is to ensure the resulting voltages are quite low (just a few volts), so they can be fed to the analog multiplier block, X3. X3 has a "power supply" of 15V, so the inputs need to be in the range of 0-15V.

We could use resistive dividers to reduce the voltages for X3 but then the source impedance seen by X3 would be non-zero and might affect its operation. SPICE components such as voltage-controlled voltages sources are "ideal" in that they have infinite input impedance and zero output impedance.

The output voltage from multiplier block X3 is the product of its input voltages and so the output voltage corresponds to the instantaneous dissipation in the thermistor, scaled down by a factor of 400 (20 x 20). So 1V out corresponds to 400W dissipation in the simulated thermistor.

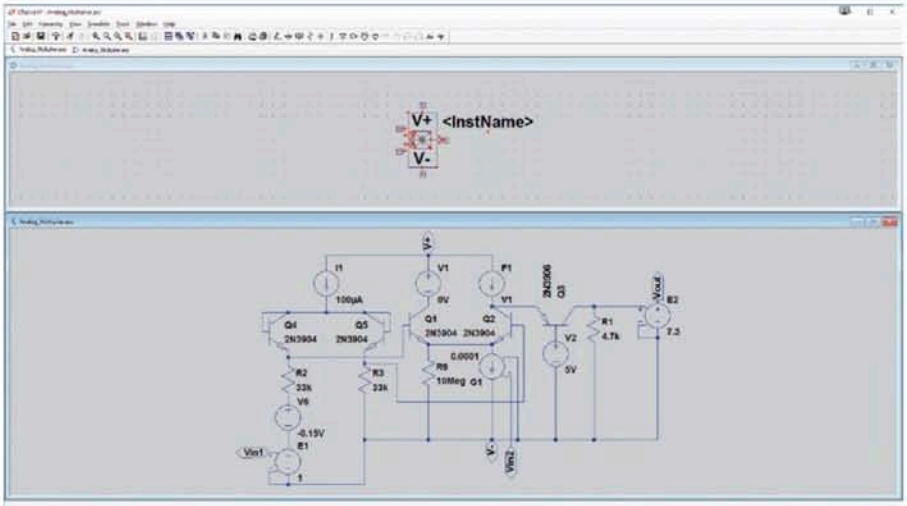


**Fig.5: the analog multiplier is based on a real circuit and uses log/anti-log stages and summation to multiply the two input voltages, at VIN1 and VIN2. VIN2 is converted into a current which is sunk from the emitters of Q1 and Q2. The voltage at $V_{OUT}$ is almost exactly equal to the product of the two input voltages.**

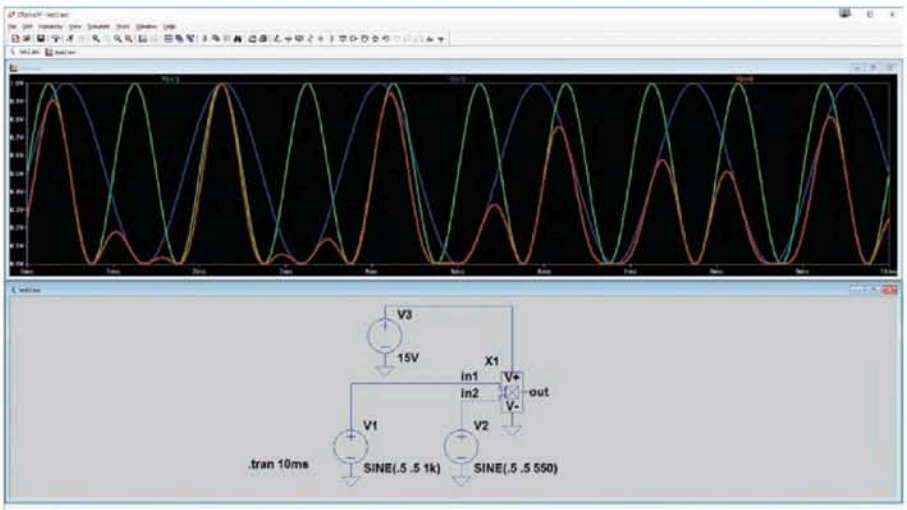


**Fig.6: our analog multiplier test circuit. Its inputs are sinewaves with 1V peak amplitude, shown in green and blue, with the resulting product shown in red.**

## Analog multiplier operation

The internals of X3 are shown in Fig.5, with its symbol at top. We got the basis of this circuit from the following URL:

**www.sayedsaad.com/montada/showthread.php?t=22594**

Essentially, the circuit computes the logarithm of the two input voltages, adds them, then exponentiates the result to produce the output voltage. The result will be proportional to the product of the input voltages, VIN1 and VIN2.

VIN1 is fed to a voltage-controlled voltage source, E1, with a gain of unity. This acts as a voltage buffer so that the source impedance won't affect the rest of the circuit. Voltage source V6 provides a -0.15V bias to this signal, which we experimentally determined was necessary in order to achieve a 0V output when VIN1 = 0V (regardless of the magnitude of VIN2).

VIN2 is fed to voltage-controlled current sink G1, with resistor R6 (10MΩ) in parallel. R6 is not in the original design but we found that this sped up the SPICE simulation, because in cases where VIN2 is very close to zero, the simulation of this circuit breaks down. As you can see, G1's gain factor is one ten-thousandth, ie, 0.0001. This is so that for VIN2 of 1V, G1 sinks 100µA, to match fixed current source I1 and provide correct scaling of the output.

I1 is connected to the positive rail (V+) to supply transistors Q4 and Q5 which are configured as diodes. The collectors of transistors Q1 and Q2 are fed by a current mirror formed by voltage source V1 and voltage-controlled current source F1.

V1 exists to measure the current at the collector of Q1. F1 is set up to provide exactly the same current, as its "value" field is set to V1. F1 also has a gain value, not shown in the circuit, which we've set to 1.

The output voltage which is the product of VIN1 and VIN2 appears at the collector of PNP transistor Q3. This is then fed to voltage-controlled voltage source E2, which acts as a buffer and gain stage. We've set its gain to 7.3 as we found that this provides an output of 1V when VIN1 = 1V and VIN2 = 1V.

The test circuit for this sub-circuit is shown in Fig.6. Both input signals (green and blue) are sinewaves which vary between 0V and 1V but at different frequencies, so the peaks and troughs coincide at various points throughout the 10ms simulation time. The output of the multiplier is shown in red.

Note that the red curve is very close to 0V when either input is at 0V and very close to 1V when both inputs are at 1V. So it is operating effectively as a multiplier.

## Ideal diode model

As shown in Fig.2, the output of X2 which represents the dissipation (labelled "pout" for "power output") passes through diode X4 then 10GΩ resistor R2, before charging 5nF capacitor C1. R2 limits the rate of C1's charging to represent the fact that the thermistor body doesn't increase in temperature instantly when the dissipation increases; it has thermal inertia.

Resistance values that high are rarely seen in real circuits because leakage currents can overwhelm them but that isn't an issue in a simulation; it's the time constant that's critical.

The purpose of diode X4 is to model the fact that the rate of thermistor heating depends on dissipation but the rate of cooling depends on its temperature. In other words, a very high dissipation should heat the thermistor up fast but if dissipation falls to zero, it cannot cool down back to its original temperature in that same time; it might take much longer. So this diode only allows the "heat" to flow in one direction.

But we don't want to use a real diode model because its forward voltage would interfere with this process. It would not conduct until the dissipation rose above a certain level and would then reduce the maximum voltage applied to C1. We would prefer an "ideal" diode which essentially

acts as a switch, turning on as soon as the voltage at the anode is above the cathode and switching off as soon as that reverses.

So that's exactly how we've modelled it. The sub-circuit and corresponding symbol are shown in Fig.7. The voltage controlled switch's control terminals are connected directly to the switch terminals. The threshold is set to 0.1mV and the hysteresis value is the same. That means the voltage across the ideal diode during forward conduction will be well under 1mV.

## Finishing the thermistor model

Getting back to Fig.2, the time constant of R2/C1 determines how quickly the modelled thermistor heats up due to internal dissipation while R4/C1 set its cool-down characteristics.

Placing resistor R4 across C1 accurately models cooling since, in the real world, the rate of cooling is proportional to the difference between an object's temperature and the ambient temperature. In the simulation, current through R4 is proportional to the voltage across C1 (a proxy for the temperature) and so the rate that "heat" leaves the model is directly related to its temperature.

So the simulated temperature, labelled "temp", is applied to the inputs of another voltage-controlled voltage source, E1, with a gain value of 500. Besides applying gain, the other reason for E1 is that it stops the following circuitry from drawing current from C1 and affecting the thermal simulation.

Voltage source V4 has a fixed value of 3.2V and this provides the Mosfet gate switch-on bias voltage for M1 and M2. Note that E1's negative output terminal is connected to the sources of M1 and M2. This means that with a simulated temperature at ambient, the gates of M1 and M2 are 3.2V above their source terminals, just on the edge of conduction. For each 2mV across C1, the gate-source voltage increases by 1V.

This gain figure was determined experimentally, by comparing the behaviour of the simulated thermistor to figures in the SL32 10015 data sheet. This figure was found to give a realistic time constant and ultimate resistance under sustained load.

It's important to realise that this model contains a negative feedback path. As the voltage across C1 increases, Mosfets M1 and M2 switch on harder, reducing the voltage across R1 and this, in turn, reduces the dissipation and thus the voltage at "pout". That then allows the voltage across C1 to stabilise at a value that depends on the voltage and current flow between points "a" and "b".

1Ω resistor R3 between E1/V4 and the gates of M1/M2 provides a tiny delay for this negative feedback which helps the simulation converge faster (see the side panel for more details on this phenomenon). The 100MΩ bleed resistor effectively between the gate and source terminals of M1/M2 was added for a similar reason.

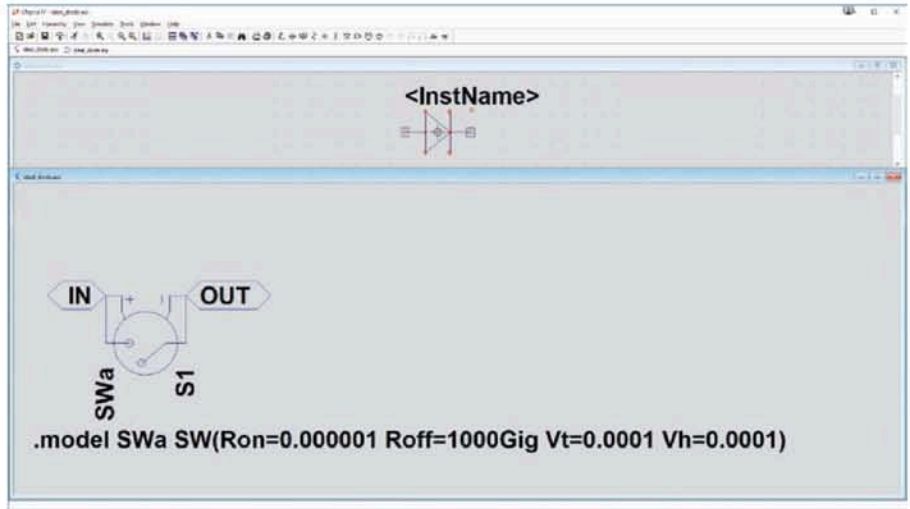


**Fig.7: another type of precision rectifier, this time in the form of an ideal diode (ie, a half-wave rectifier). This is basically just a switch which allows current to flow from input to output only when the input voltage is higher than the output voltage.**

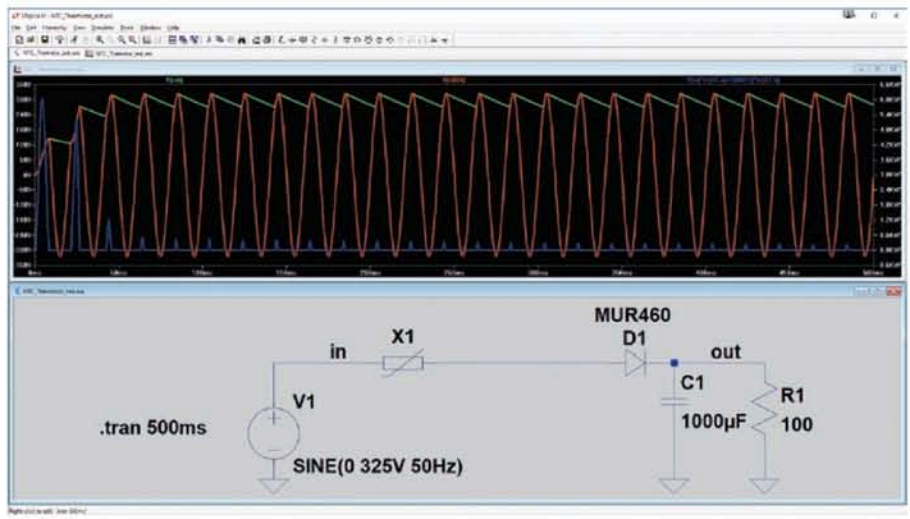


**Fig.8: a simple test circuit for our now complete NTC thermistor model, utilised here as X1. The load is primarily capacitive so draws the most current around the mains peak. You can see how the capacitor voltage (green) rises relatively slowly, over around 50ms, while the thermistor dissipation (blue) starts very high but drops down to a low level after around 100ms.**

## Testing the NTC thermistor

Fig.8 shows the test circuit. We have a 325V peak sinewave representing the mains, with the thermistor in between it and the test load. There's a simple half-wave rectifier feeding a 1000µF high-voltage capacitor with a 100Ω bleeder/load resistor. This is intended to crudely simulate a capacitor-input switchmode power supply with a load.

Above it, you can see the result of the simulation, with the voltage across R2 in red, voltage across C1 in green and instantaneous dissipation in X1 in blue. (By the way, to plot dissipation of a component in Windows, hold down the ALT key while clicking on that component. Once you've done that, to display the average power, zoom over the relevant portion of the waveform and hold CTRL while clicking on the

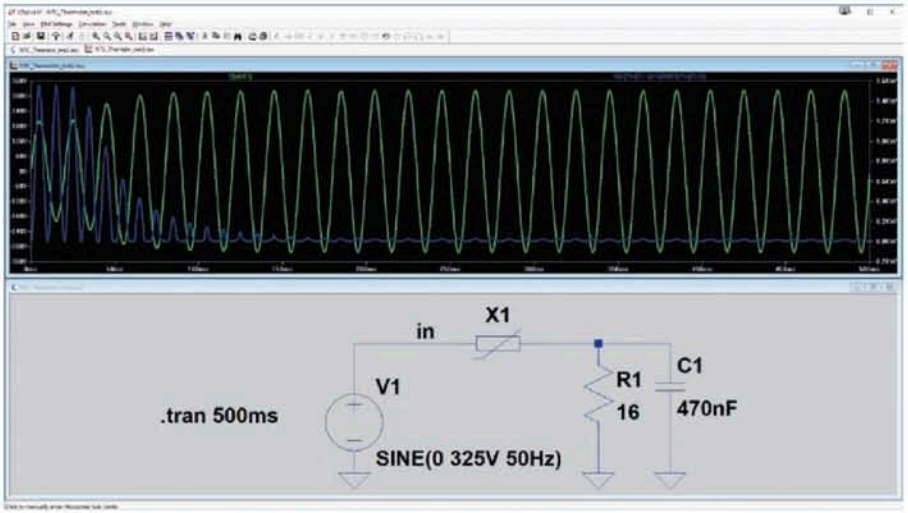


**Fig.9: another test of the NTC thermistor model, this time with a primarily resistive load of around 15A. It takes around 100ms for the load voltage to rise close to the full 230VAC with thermistor dissipation initially averaging 600W, dropping down to 10W in the steady-state condition after around 200ms.**

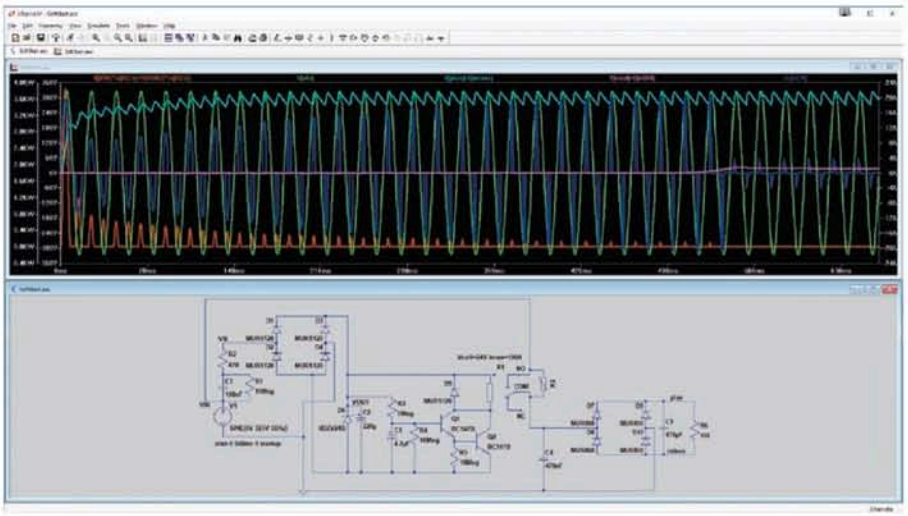

**Fig.10: we can now complete our simulation of the SoftStarter. It uses the relay and NTC thermistor sub-circuits we've developed plus a typical load comprising an EMI suppression capacitor, bridge rectifier, mains filter capacitor and 100Ω equivalent resistive load. We can probe the voltages and currents at various points more easily than with the real circuit, which floats at mains potential.**

formula at the top of the plot window.)

As shown, the voltages rise quite gradually, over the first few mains cycles. If you remove X1 from the circuit, C1 charges almost instantly, in under 1ms, drawing a peak current of almost 1000A! A real capacitor would have too much parasitic resistance/inductance to draw quite so much current but the contrast is still educational.

Note how the thermistor dissipation drops initially, then rises a little before finally dropping down to a stable level. That's because after the thermistor heats up a little initially and its resistance drops, it allows more current to flow into C1 which briefly increases its dissipation before the voltage across X1 drops, further reducing its dissipation.

Fig.9 shows a variation on this test circuit, where we have replaced the capacitor input power supply with a resistive load shunted with an EMI suppression capacitor. With a load resistor of 16Ω, it will draw 14.4A RMS on a continuous basis (ie, 230VAC ÷ 16Ω). As you can see, in this case, the thermistor heats up a little more gradually and as the voltage across R2 approaches the full 230V RMS, dissipation in the thermistor drops from an initial average of 600W down to around 10W after about 200ms.

Note that if you are experimenting with these circuits, you may find that certain changes will cause SPICE to run the simulations very slowly or halt altogether. This is due to a failure to converge – see the side panel explaining this problem.

## Putting it all together

Fig.10 shows our now complete SoftStarter circuit at bottom, based on what we finished with last month (ie, incorporating the relay model we developed then) but now also including our thermistor, X2, plus a test load circuit comprising EMI suppression capacitor C4, bridge rectifier D7-D10, filter capacitor C5 and resistive load R6.

The simulation output at top shows the mains voltage at V1 (green), voltage across the load at C5/R6 (cyan), current through simulated thermistor X2 (blue), voltage across the relay coil (mauve) and thermistor dissipation (red).

As you can see, the inrush current is limited to around 20A, which is pretty much the same peak current that the load draws during normal operation. You can see the thermistor dissipation is very high over the first few cycles but drops to below 10W after about 500ms, at which time the relay coil voltage rises and the thermistor is shorted out.

Its dissipation then drops to almost zero; if the relay didn't close then, its dissipation would continue to drop, to a steady-state value of around 4W. So in other words, the simulation is working correctly and showing how the real circuit behaves!

Note that a small amount of current is still shown flowing through the thermistor even after the relay contacts close. This is as a result of the non-zero relay contact resistance we've programmed into our model. But because the product of current and voltage is so low, dissipation still appears as a flat line once the relay latches.

Note also that Fig.10 shows the voltage across the relay coil of X1, even though that part of the circuit is not connected directly to ground. This can be achieved by right-clicking in the plot window and selecting "Add Trace", then typing in the expression V(x)-V(y), where "x" and "y" are nodes in the circuit.

This is one reason why it's a good idea to label nodes in the circuit (as we have with $V_{OUT}$) since the automatically generated node names like "n004" can change if you modify the circuit.

You also need to figure them out (by

## Simulation slowness, pausing or intermittent failure

SPICE simulations have two distinct phases, the first of which is optional, but normally present. The first phase is where it determines the initial DC operating point. In other words, for every component which has state – primarily capacitors (charge) and inductors (magnetic field strength) – it needs to determine the steady-state condition* with which to start the simulation.

If you have something like an oscillator in the circuit, it won't have a steady state, but SPICE will still attempt to determine a reasonable starting point – a condition which a real circuit may find itself in at some point in time, prior to any AC signals being applied.

Various circuit configurations can make this impossible. One thing that often throws SPICE off and prevents it from finding the initial DC operating point is nodes which have no DC current path to ground. For example, it's perfectly valid to apply an AC signal to a pair of series-connected capacitors, with them operating as a capacitive voltage divider.

But unless you have a way for current to flow from the junctions of these capacitors to ground, SPICE will often throw up its arms in disgust. The usual solution to this problem is to connect a high-value resistors from this junction to ground. It will have negligible effect on the operation of the circuit but may help SPICE to converge on an initial operating point solution.

If you've drawn up a circuit and can't figure out any way to get SPICE to get past this initial hurdle and start the simulation, your other option is to get it to skip this step entirely and either start with everything in a default state (capacitors and inductors discharged etc). Or alternatively, you can specify the initial state of the components yourself.

In fact, you can even adopt a "mix-and-match" approach, providing initial states for some component and letting SPICE figures the other out. You may need to use trial and error to determine which components need their initial conditions defined before the software will reliably complete this step.

To set the initial condition of a component, modify its value and add " ic=xx" to the end, where xx is the initial value. For example, a capacitor can have a value of "10uF ic=5V" and an inductor can have a value of "100uH ic=1A". If you also add " uic" to the end of the simulation command (labelled "skip initial operating point solution" in the LTspice configuration dialog), all components will start with a value of 0V/0A unless the initial condition is specified.

Note that you can also abort the initial operating point solution, if it gets stuck, by pressing the ESC key on your keyboard. SPICE will then take whatever its last guess was as to the initial conditions and run the simulation.

SPICE can also get stuck during the simulation, for similar reasons. This is often at the point where a transistor is moving into or out of conduction, a diode is becoming forward biased and so on. The rapid changes in circuit behaviour at these points can cause it to move forward in smaller and smaller time steps. It will normally eventually get past that point but it may take a long time, and it may get stuck again soon afterwards.

There are various techniques you can use to avoid or mitigate this. First, it helps to understand why this happens. The following course notes contain some useful information on this aspect of SPICE: www3.imperial.ac.uk/pls/portallive/docs/1/7292571.PDF

This document is from the Department of Electrical and Electronic Engineering, Imperial College London. On page 24, it states "There are convergence problems associated with very high conductance [... and] very high resistance".

On pages 23 and 24, it shows an example of attempting to iteratively solve a circuit involving a current source, resistor and diode and shows how, depending on the algorithm used, the software may not be able to converge on the solution.

The following pages discuss the GMIN parameter, one of several you can adjust in LTspice which may help prevent it from getting stuck. This can be changed by going to the "Control Panel" menu option in the "Tools" menu and clicking on the SPICE tab.

We experimented with some of these options and found that changing the "Default Integration Method" from "modified trap" to "trapezoidal" sometimes caused our simulations to run much more smoothly with a range of different component parameters.

Changing the "Solver" from "Normal" to "Alternate" had an even bigger effect on the simulation's performance. There were times where it would absolutely crawl with the Normal solver but ran very fast and reliably with the Alternate solver. So if you find your simulation getting stuck, it's well worth trying to change these parameters before resorting to modifying your circuit.

If you do need to modify the circuit, we suggest the following: add high-value resistors across capacitors, or from the ends of capacitors to ground. Add high-value resistors or low-value capacitors across diodes and/or transistor junctions. For generic components, try different component models, or try using models of similar parts.

Many of these changes can have negligible impact on the accuracy of your simulation while potentially making SPICE run much faster and without getting "stuck" as often. For example, in our SoftStarter simulation (shown in Fig.10), we sometimes get an error message that the initial operating point solution failed, implicating diode D7. While changing the Default Integration Method helped, another solution we found was to put a low-value capacitor across D7. This has hardly any effect on the results but seemed to overcome that particular problem. So that's one example of a way to modify your circuit when SPICE is "playing up".

** a circuit may have zero, one or many steady-state conditions. These are conditions where the series of simultaneous equations that represent the circuit's behaviour converge to a fixed set of values. This is important for transient simulations as without a steady-state condition, SPICE cannot model the behaviour of the circuit.*

hovering the mouse over a point in the circuit and looking at the bottom of the window) before you can enter the expression, whereas if the circuit nodes are labelled, the names are obvious.

## Conclusion

So what is this simulation good for? First, it would allow us to more easily tweak the power supply component values, the time constant values which set the relay delay time and so on. It also allows us to examine the voltages and currents applied to each component to verify that they will not experience conditions outside their ratings.

For example, we can examine the expected inrush current for various different types of load and whether the relay time delay is sufficient to allow the thermistor to finish its job of limiting that current before it's shorted out. We could also see the effect of disconnecting the load and then re-connecting it some time later, before the thermistor has had a chance to fully cool down.

That's it for this month. In our next SPICE tutorial, we will look at simulating audio circuits, especially those which involve op amps. SC

# ALTRONICS
# Build It Yourself Catalogue
# OUT NOW!

Yours FREE with this issue of Silicon Chip. If you didn't receive your copy, contact your newsagent or register at **www.altronics.com.au/catalogue** to receive one by post for FREE!

Below are just a few of the 1000 new products in our 29th Edition...

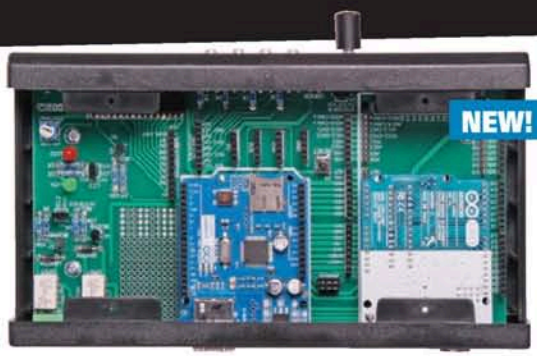


**Inventa® MegaBox Kit** K 9670 **$80**

The MegaBox allows an Arduino UNO or Mega to be plugged into it, along with a shield allowing you to build a design into a finished case. Plus it also features a 16x2 LCD, four buttons, rotary encoder, dual 2A 5V relay outs. All pins broken out to headers for connection to other breakouts.

**$19.95**

X 3250 Warm White
X 3251 Natural White

**Modular Aluminium 12V LED Strips**

Perfect for lighting cabinets and workspaces in caravans, 4WDs etc. Strips can be daisychained together using an included joiner. Provide a crisp 975 lumen output from 2835 size LEDs. 25Wx10Hx500Lmm.

**$29.95**

Z 6440

**BBC micro:bit GO Kit**

The BBC micro:bit is a pocket sized codeable computer with motion detection, compass, LED display and Bluetooth on board. Designed to be fun and easy to use for students in coding class rooms. It even connects to Arduino and Raspberry Pi! Includes USB lead and battery pack.

C 5066 **$249**

**Edifier® Active Bookshelf Speakers**

**With Bluetooth streaming.** We were floored when we demo'ed these speakers! Great sound from a compact enclosure design. Fantastic sound for your home theatre, hi-fi or gaming rig. Dual analog RCA inputs. Model: R1700BT. Size: 154×258×214mm

**'Getting Started' Electronics Tool Kit** **$34.95** T 2162

**Great for new enthusiasts, students and educators.** This handy kit is supplied complete with carry case and includes all you need to get soldering!

- 30W soldering iron with 1mm conical tip
- Iron stand
- 2m lead free solder
- Vacuum solder sucker
- Long nose pliers
- Side cutters.

**$69.95** Z 6303

**Raspberry Pi Zero W Kit**

The Pi Zero W offers amazing power and features from a compact board including Bluetooth and 802.11b/g /n wi-fi. 1GHz CPU with 512MB of RAM. Mini HDMI & USB OTG on board. Kit includes Zero W board, header pins (unsoldered), case, 16GB SD card (with NOOBs), mini HDMI adaptor and USB adapter.

## Build It Yourself Electronics Centres

» **Virginia QLD:** 1870 Sandgate Rd » **Springvale VIC:** 891 Princes Hwy » **Auburn NSW:** 15 Short St
» **Perth WA:** 174 Roe St » **Balcatta WA:** 7/58 Erindale Rd » **Cannington WA:** 5/1326 Albany Hwy

## 1300 797 007

**Shop online 24/7 @ www.altronics.com.au**

© Altronics 2017. E&OE. Prices stated herein are only valid until 30/09/17 or until stocks run out. All prices include GST and exclude freight and insurance. See latest catalogue for freight rates. All major credit cards accepted.

# Build an Arduino Data Logger with GPS

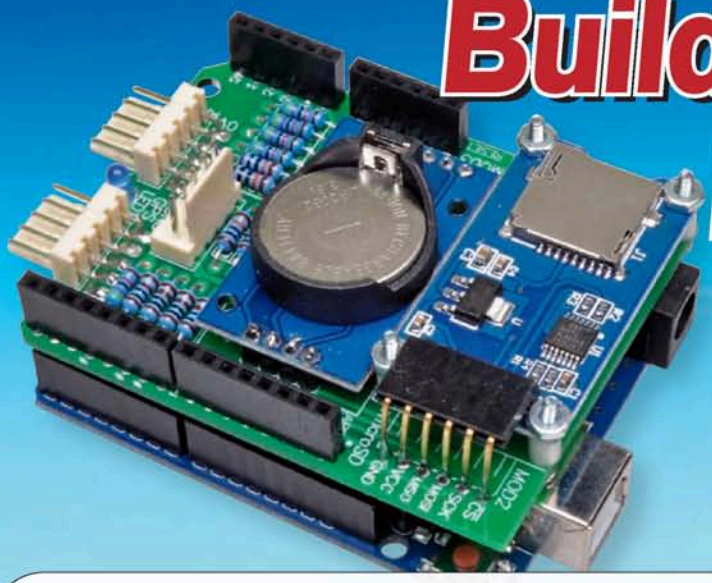

## Part 2 by Nicholas Vinen

As promised, here is a follow-up to the Arduino Data Logger article from the last issue, with more details about how its software operates. We will also take you through the steps required to add support for new sensors and show some photos of the completed shield PCB.

**While the bulk of this article** details the operation of the critical Arduino software for the data logger, we also have some important information on building the shield PCB, shown in the photos.

Upon building the PCB, we discovered an error in the overlay diagram, Fig.2, on page 30 of the August 2017 issue. The pins for the DS3231 real time clock and calendar module were labelled incorrectly. The revised diagram, shown here, gives the correct labelling.

The PCBs that we supply from our Online Shop will have the correct labelling.

Regarding mounting the DS3231 module, our module came fitted with a 6-pin right-angle header. We straightened this with a pair of pliers and then soldered a 4-pin straight header at the opposite end.

This module can then be soldered directly to the PCB, as shown in the photos. Make sure to trim the pins so that they can't short against anything on the Arduino board below. The advantage of this approach is that you don't need to use any screws or spacers to retain it on the board.

As for the microSD card module, we used four M2 machine screws and nuts to hold it on the board, along with short untapped spacers. You could use Nylon nuts or washers as spacers. These parts were not listed in the Parts List last month (see Extra Parts on page 90).

It needs to be pretty close to the board if you're using a socket to make the electrical connections, as we did, or else the socket pins will not reach the pads on the board.

The remaining construction details were in the article last month. So refer to that article to complete the shield.

Now let's move on to the Arduino software sketch details.

### Software description

The SdFat and SPI libraries are used to read and write data on the microSD card, which is formatted with either FAT16 or FAT32. RTClib is used to control the DS3231 real-time clock and calendar module. The TinyGPS library is used to decode data from the optional GPS unit, although the software serial interface used to receive data from it has been customised, as explained below.

We also use the OneWire library to communicate with a DS18B20 temperature sensor, if present, and the MsTimer2 library to manipulate hardware Timer2 if we have set up any of the digital inputs to measure frequency.

We use Timer2 to provide the normally one second gating period to count pulses on the relevant pin, because Timer2 can be left running in one of the sleep modes. This mode uses more power than the normal sleep mode, so we only use it when the frequency counting feature is active.

We also have some custom routines to put the ATmega328P microcontroller on the Arduino into sleep mode and wake it up when required.

The setup() routine is run at power-up time and first sets up the input and output pins. It then checks that the real-time clock module is present and whether it has the current time. If not, it sets the clock time to be the time that the sketch was compiled, plus 20 seconds (to allow for the approximate time required to compile and upload the sketch). It then stores the new time in EEPROM.

If the Arduino is reset within one minute, as determined by comparing the clock time to that stored in EEPROM to the RTCC, the time is advanced to the next whole minute. Thus, if you programmed the chip at say 11:37:25, and reset it at exactly 11:38:00, the clock would have the correct time, accurate to the second.

The setup routine then initialises the microSD card and assuming that's

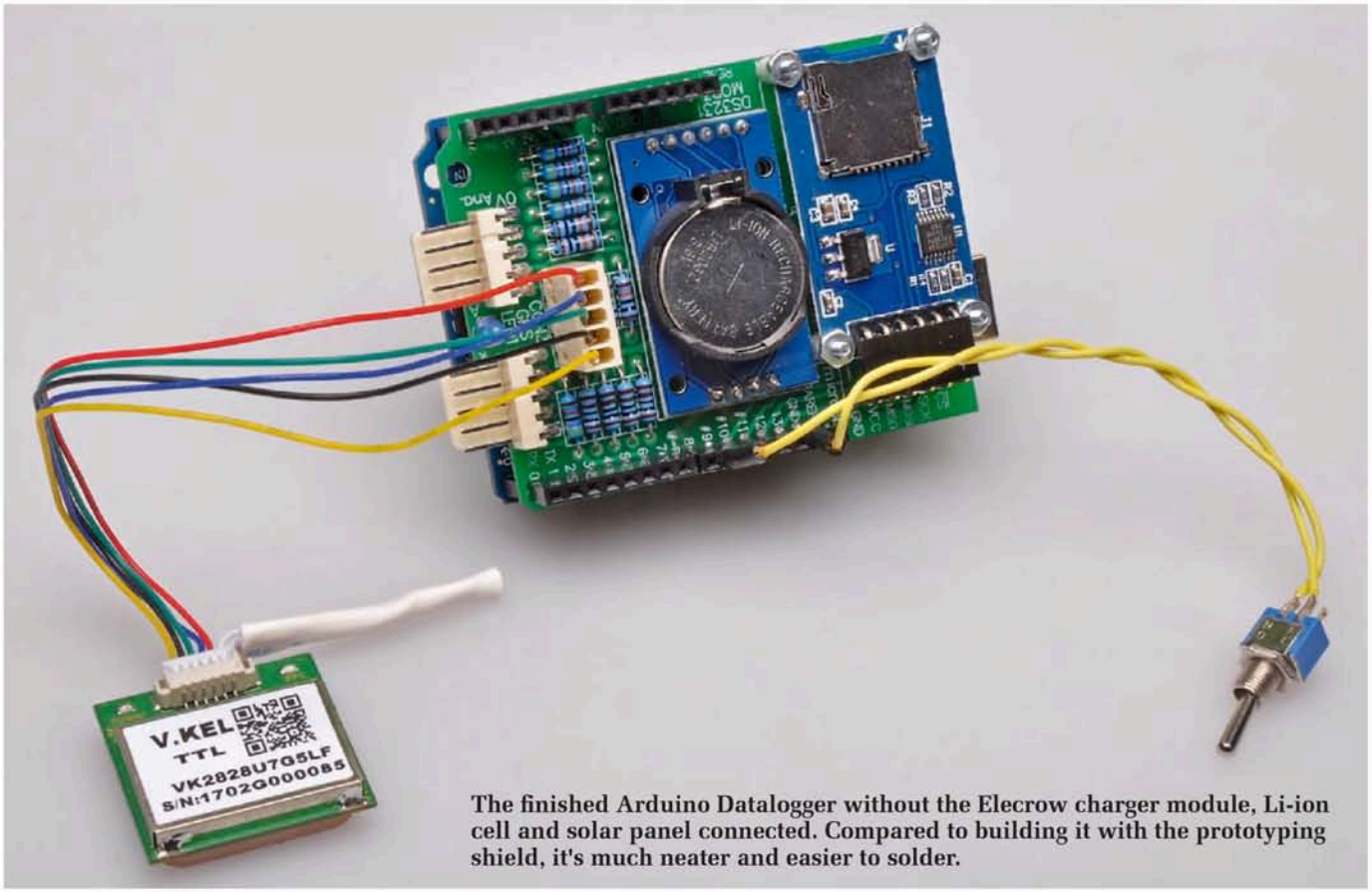


**The finished Arduino Datalogger without the Elecrow charger module, Li-ion cell and solar panel connected. Compared to building it with the prototyping shield, it's much neater and easier to solder.**

successful, the main loop starts and runs as long as there is 5V power available. If either the real-time clock or microSD card initialisation fails, LED1 flashes in an endless loop to alert the user. It flashes at 2Hz for a real-time clock fault and 4Hz for an SD card fault.

## The main loop

The main loop() function first checks for the presence of a GPS module, if one has not already been detected. In the absence of a GPS unit, pin D8 is always high.

If D8 is found to be low, the software serial port is set up to receive data from this pin at 9600 baud, with TTL signal levels. This serial port is then monitored for ten seconds, looking for the string "$GPRMC," which is part of the standard NMEA data stream.

If during those ten seconds this string is identified, a flag is set in the software indicating that a GPS module is present. Otherwise, the serial port is closed down and the low level on D8 is assumed to be from electrical noise.

If a GPS module is determined to be present, the unit will then wait for the programmed period for a position lock (defaulting to five minutes). If a lock occurs during this time, the latitude and longitude (along with the number of satellites in view and the current time) are stored for future reference and pin D7 is driven low, to switch off the GPS module and conserve power. It is only brought high again once the GPS details need updating, which by default is once per hour.

If a lock does not occur during this time, the location data is not updated but the GPS module will still be powered down for an hour, at which point it will try again. If the unit had GPS lock previously, those co-ordinates will be preserved. Otherwise, they will be kept blank.

While it is doing all this, the normal data logging tasks are still going on, as we don't want to lose any data just because the GPS module is active.

## Data logging

Each time through the loop, the unit checks the state of D9. If D9 is high (it is pulled high by default), and the unit has not received a message on its serial interface to pause logging, it will then check whether the configured logging interval has passed.

If it has, the states of the analog and digital inputs are queried and stored in a RAM buffer, along with the data

**The revised PCB overlay diagram from last month. The difference is that every connection on the DS3231 RTC was flipped horizontally, eg, GND ↔ SCL, VCC ↔ SQW, etc.**

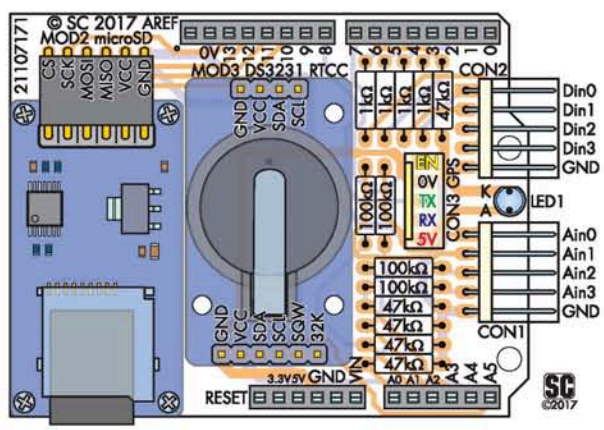

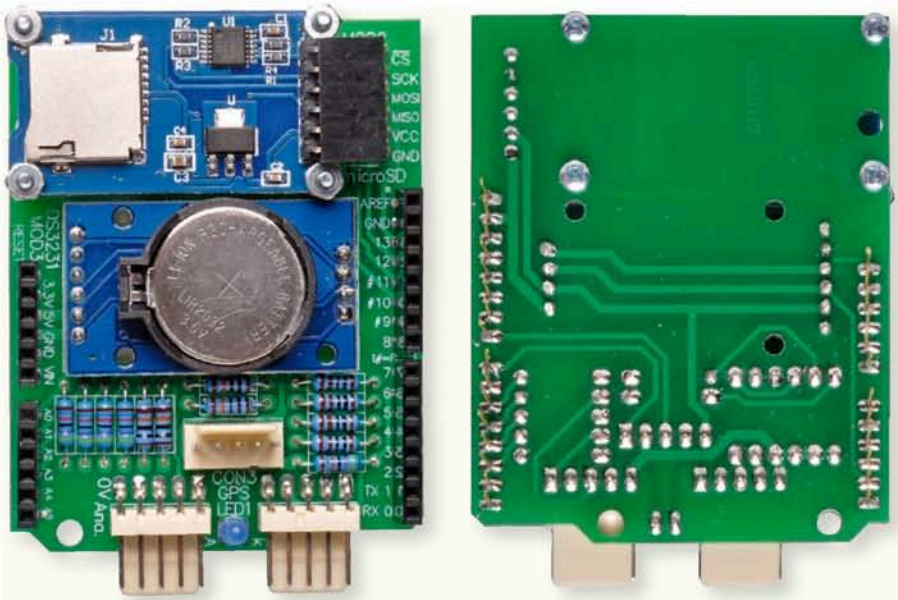


**Top and bottom views of the assembled shield board. The right-angle polarised connector at lower left (on the top view) is for the four analog inputs plus ground while the digital inputs are on the 5-pin header to its right. Note the real-time clock module is mounted so the cell is accessible.**

from any extra sensors that the logger is configured to query.

Once this RAM buffer is full, typically after about a minute, the microSD card is brought out of sleep mode and the values are converted into human-readable format and appended to the log file. While this is happening, LED1 is lit. As a result, is flashes very briefly about once per minute, to indicate that logging is occurring.

If pin D9 has been driven low, or a pause command is received on the serial console, the log file on the microSD card is closed and the unit will go into sleep mode to conserve power until it is told to continue logging.

The next time there's logged data to be written to the microSD card, a new file will be created with the name containing the date and time of the first log entry and the entries will subsequently be written to that file.

Once all the logging tasks have been completed, the software checks the main USB serial console to see if any data has been received. If it has, it compares it against a list of commands and if a valid command has been received, it processes it. There are four commands: "stop", "cont", "list" and "dump". They are terminated with a newline (enter/return).

"stop" pauses logging and "cont" resumes it; pausing is equivalent to pulling pin D9 low, so when a "stop" command is received, any buffered data is written to the microSD card and it can then be removed. When it's replaced, the "cont" command will then cause the log file to be re-opened (assuming D9 is not held low).

The "list" and "dump" commands can only be used when the log file is closed, so will normally be preceded by a "stop" command. "list" displays a list of all the log files on the microSD card over the serial console. Dump then allows one of them to be downloaded through the serial console. The log file name to be written must be sent immediately after the dump command, for example, "dump ArduinoLog_2017-06-28_094837.log".

## Sleep mode

When the unit is not doing any logging, handling any serial commands and the GPS unit is not powered up, it will go into sleep mode to conserve power.

We couldn't find a suitable Arduino library to perform this sleep function so we wrote the SleepMilliseconds() function ourselves. This will put the chip into sleep mode for a period between 16ms and eight seconds, using the low-power watchdog time to wake it up.

During this time, the ATmega328P consumes well under 1mA. However, other circuitry on the Arduino board (eg, regulators) brings the total up to around 8mA. Still, this is a much lower power consumption than when it is active and allows for a decent battery life.

One of the tricks we've employed is that we temporarily disable the Arduino's hardware UART which provides the main USB serial port when entering sleep mode, so that we can enable a Pin Change Interrupt on pin D0, the RXD pin for that serial port.

This means that the chip will automatically wake up if the state of that pin changes, which occurs whenever there's any serial data being transmitted to the unit. Hence, the unit can be in low-power sleep mode but still respond to commands on the serial port.

We ran into one slight problem with the Arduino SdFat library which is that the first time you open a file on the SD card, the card's current consumption jumps from under 1mA to around 15mA and even if you close the file, it will continue to operate at the higher power level.

We solved this by closing the file after each write and resetting the SD card interface, via a call to the sd.begin() function. We then re-open the file later and append data as required.

This means its power consumption is back under 1mA all the time, except when we are actively writing to it. Apparently this is a well-known and long-standing bug in the Arduino version of the SdFat library and it's mystifying that it has never been fixed.

## GPS serial interface

The Arduino Uno only has one hardware serial port which is hooked up to its USB port (via a second Atmel chip on the Uno board). We wanted to keep this for communications with a PC, so that logged data could be off-loaded without removing the microSD card (although in some cases, removing the card would be easier/faster).

That means that the serial data from the GPS unit must be received using a "software serial port", where the RXD pin is just a normal digital input (with internal pull-up enabled) and software routines count the time between state changes on that pin to decode the serial data.

The Arduino IDE comes with a popular library called SoftwareSerial to do just that but we discovered in writing this software that it has serious limitations. Basically, the problem is that it's a "blocking" type library, where the

CPU is 100% busy during the time that serial data is being received.

Since a GPS unit sends out quite a large burst of data each second, of several hundred bytes, without a huge RAM buffer, the buffer would always overflow. That's because while the CPU is busy receiving serial data, it has no time left to actually process it.

There's another problem with SoftwareSerial which is that it assumes that if you're allocating a pin to receive serial data, you also want to allocate a second output pin to send serial data. We don't need to send any data to the GPS unit and we don't have any spare pins.

We found a library called AltSoftSerial which solves the first problem. It uses a piece of hardware in the Atmel chip known as an "input compare unit" which, in combination with a hardware timer, effectively provides time stamps indicating when the state of a pin has changed.

This allows the processor to continue running other code while it waits for transitions on the serial input pin and since the library is interrupt-based, it provides a software serial port that works almost as well as the hardware port (at the low 9600 baud rate we're using, anyway).

Its major limitation is that the input compare unit is hooked up to pin D8, so you must use this as the RXD pin (and therefore you can only have a single AltSoftSerial port). Similarly, it uses "output compare" hardware to produce the TXD signals in an asynchronous manner, which means the TXD pin must be on D9.

In a stroke of luck, it just so happened that we had hooked up the GPS TXD pin to D8 on our prototype, and its RXD pin to D9, so we could use AltSoftSerial without having to make any hardware changes.

However, when we subsequently decided to add S1 to the design, we found that AltSoftSerial also forced you to use the transmit and receive functions together. So we made a copy of the library, renamed it ReceiveOnlyAltSoftSerial and deleted the sections which enable transmission. That library is provided along with our sketch.

## Adding new sensors

One of the major advantages of this data logger over our previous projects is that it's quite easy to customise.

While we provided it with a wide range of standard features, we haven't tried to account for every possible sensor that you might want to attach. For example, you may want to log data from an I²C barometric pressure or humidity sensor.

Since it's written using the Arduino IDE and already has built-in I²C support, you just can download some example code for the sensors you want to use, check that the example sketch works and then integrated it into the data logger code. This does require some programming experience but there's a lot of information available on the internet on programming Arduino.

One minor issue to consider is the amount of free flash memory space. With all the features enabled in our code, it uses 96% of the total flash memory (30,978 bytes out of 32,256 bytes).

However, if you don't need the DS18B20 or frequency counter support, that immediately drops to 84% (27,394 bytes). Disabling serial debugging (by removing the #define SERIAL_DEBUG line near the top of the file) drops this further, to 81% or 26,406 bytes.

We realise that modifying the software can seem daunting, so we'll give a concrete example showing you the modifications to make to interface a GY-68 I²C barometric pressure sensor to the unit (and we will be offering this sensor in our online shop in case you want to give it a go; Cat SC4343).

This sensor will be described in some detail in a future "El Cheapo Modules" article. It contains a BMP180 sensor and has a 4-pin SIL header with the pins labelled VIN, GND, SCL and SDA. Wiring it up to the Arduino is easy; we just used four male-to-female jumper leads to connect these pins to 5V, GND, A5 and A4 respectively.

We then downloaded the sample Arduino code for this module and discovered it uses an I²C address of 0x77. The sample code contains a number of helper function to interface with the sensor.

The first step to integrating this with our Data Logger code is to remove the line near the top of the file which reads "#define DS18B20_INPUT 2". We don't need the DS18B20 temperature sensor features since the GY-68/BMP180 has an onboard temperature sensor. This frees up some flash memory, giving us 10% free.

We then copied and pasted the entire GY-68 sample code into the bottom of the Data Logger sketch but deleted the setup() and loop() functions (as these would conflict with those used by the Data Logger).

The sample code does two things in its setup() function: sets up the serial port, then calls the function "bmp085Calibration". So our next step was to add a call to this function at the bottom of our setup() routine. The end of the setup() function now looks like this:

```
bmp085Calibration();

#ifdef SERIAL_DEBUG
  Serial.println(F("SILICON CHIP
    Arduino Datalogger ready"));
#endif
```

**From the side you can see that due to the depth of the screw head that the PCB doesn't fit entirely flat relative to the Arduino board. If this is an issue for you, simply omit the screw in that corner; as it will still have three others to support it.**

## Extra Parts for the Arduino Datalogger

*Used for mounting the microSD module to the shield PCB*
4 M2 x 10mm machine screws
4 M2 hex nuts
4 short (~4mm) tapped or untapped spacers to suit M2 screws
***OR***
4 M3 Nylon nuts
***OR***
8 M2/M3 Nylon washers, 1mm thick

Looking at the loop() function in the sample code, the following four lines at the top are responsible for reading data from the sensor:

```
// MUST be called first
float temperature =
  bmp085GetTemperature
  (bmp085ReadUT());

float pressure =
  bmp085GetPressure
  (bmp085ReadUP());
// "standard atmosphere"
float atm = pressure / 101325;
// Uncompensated calculation
// - in metres
float altitude =
  calcAltitude(pressure);
```

Note that there is a bug in this code; the third float variable should be set to:

```
float atm = pressure / 101325.0;
```

Otherwise, it will round the atmospheric pressure to the nearest bar (ie, it will pretty much always be 1.0)! Anyway, having looked at this code, we need to create some RAM buffers for storing these values before we can log them. Towards the top of the Data Logger code, at the end of the section labelled "// Other stuff", we add the following line to do this:

```
float BMP180buf
  [LOG_RAM_ENTRIES][2];
```

This gives us two floating point values per log entry to store the pressure and temperature data. So now, we modify the end of the function "write_RAM_log_entry" to look like this:

```
// in degrees Celcius
BMP180buf[log_ram_filled][0] =
  bmp085GetTemperature
  (bmp085ReadUT());
// in bar
BMP180buf[log_ram_filled][1] =
  bmp085GetPressure
  (bmp085ReadUP()) / 101325.0;
++log_ram_filled;
```

Now we just need to modify the "write_buffered_log_entries" functions so that the temperature and pressure values are written to the log file.

First, we modify the CSV header, so that the line which used to look like this:

```
if( !file.println(F("Date,Time,VA0,
  VA1,VA2,VA3, D0,D1,D2,D3,
  Lat,Lon,NumSats,
  SecondsSinceLock")) )
```

Now looks like this:

```
if( !file.println(F("Date,Time,VA0,
  VA1,VA2,VA3, D0,D1,D2,D3,
  Temp,Pres,Lat,Lon,NumSats,
  SecondsSinceLock")) )
```

We also need to modify this section:

```
#else
static const char
  LogEntryTemplate[] PROGMEM
  =
  "%02d/%02d/%04d,%02d:%02d:
  %02d,%d.%02d,%d.%02d,%d.
  %02d,%d.%02d,%d,%d,%d,%d";
#endif
```

That's rather hard to understand but basically, it just defines the format of each number that's stored in a log entry in the CSV file.

We need to add two, both with decimal points, at the end (GPS data is not included in this line). After adding these, the new line looks like:

```
static const char
  LogEntryTemplate[] PROGMEM
  =
  "%02d/%02d/%04d,%02d:%02d:
  %02d,%d.%02d,%d.%02d, %d.
  %02d,%d.%02d,%d,%d,%d,%d,
  %d.%01d,%d.%03d";
```

Note that we have set it up to log the temperature with one decimal place (%01d) and pressure with three decimal places (%03d).

Next, we need to make sure that the RAM buffer used to temporarily store the log lines before writing to the SD card is large enough, so change this section:

```
#ifdef COUNTER_INPUT
  char buf[56+38];
#else
  char buf[56+30];
#endif
```

to:

```
#ifdef COUNTER_INPUT
  char buf[72+38];
#else
  char buf[72+30];
#endif
```

Now all that's left is to add the code to actually write the temperature and pressure data to the log file. Just after the line which reads:

```
// add any extra logged data here
```

We insert the following:

```
,(int)BMP180buf
  [log_ram_filled-1][0]
,(int)((int)(BMP180buf
  [log_ram_filled-1][0]*10))%10
,(int)BMP180buf
  [log_ram_filled-1][1]
,(int)((int)(BMP180buf
  [log_ram_filled-1]
  [1]*1000))%1000
```

This is a bit complex because unfortunately, the Arduino sprintf() function (used for converting numbers into text) does not support floating point numbers. So what we do is first print the integral portion of each value, then the digits after the decimal point; one for temperature and three for pressure.

Running the Verify/Compile command from the Sketch menu then gives us the following output at the bottom of the screen:

```
Sketch uses 30,608 bytes (94%)
  of program storage space.
  Maximum is 32,256 bytes.
Global variables use 1,470 bytes
  (71%) of dynamic memory,
  leaving 578 bytes for local
  variables. Maximum is 2,048
  bytes.
```

So all the extra code for the BMP180 pressure/temperature sensor takes just 4% of the flash memory space and leaves plenty of RAM free, despite the extra buffering.

Uploading this new code to our prototype gives the following log output:

# Customising the software

You can simply download the software and then upload it to an Arduino Uno to get started with the data logger. However, since each logging application is different, we went to some effort to make the software easily customisable. The top of the sketch looks like this:

```
#define LOG_INTERVAL_SECONDS    6
#define VRAIL_5                 5.000
#define A0_DIV_RATIO            (100.0/47.0)
#define A1_DIV_RATIO            (100.0/47.0)
#define A2_DIV_RATIO            (100.0/47.0)
#define A3_DIV_RATIO            (100.0/47.0)
//#define DS18B20_INPUT         2
//#define COUNTER_INPUT         3
#define COUNTER_AVG_MS          1000
#define LOG_RAM_ENTRIES         6
#define GPS_TIMEOUT             (60*5)      // 5 minutes
#define GPS_CHECK_INTERVAL      (60*30)     // half an hour
#define SERIAL_DEBUG
```

You can change the first line to vary the logging interval, in the range of 1-60 seconds.

The second line should be altered to provide maximum accuracy for the analog inputs. Simply power up the data logger with your preferred power supply and measure the voltage between the 5V and GND pins. Change the VRAIL_5 value to this figure and (re-)upload the sketch.

Note that if you're using the solar option, it's best to make this measurement while the unit is running off battery power since this will be the normal condition and it's likely to result in a different measurement than when USB/solar power is connected, as this will bypass the power supply regulator.

The next four lines, Ax_DIV_RATIO, allow you to change the 100kΩ/47kΩ dividers for the four analog inputs to measure higher voltages. Simply increase the 100kΩ value or decrease the 47kΩ value to allow higher voltages to be measured, then alter the relevant lines in the software to compensate. If you don't, you will get incorrect readings. Since the four values are defined separately, you can use different divider values for each analog input.

The next two lines define which of the four digital inputs (#0-3) are used for a DS18B20 temperature sensor and as a frequency counting input. These features are disabled by default, to save power, so the four inputs operate as general purpose digital inputs. Remove the two slashes at the start of the line to enable that feature. Leaving these features disabled will also increase the amount of free flash memory.

Note that if you are using a DS18B20, it must be connected directly to one of pins D2-D5 rather than via a 1kΩ resistor (or replace the relevant 1kΩ resistor with a wire link) and you also need to fit a 4.7kΩ pull-up resistor from 5V to that pin – see Fig.1 last month. If using the frequency counting feature, the maximum frequency is limited to roughly 10kHz and readings can be expected to be within a few percent of the actual frequency.

The next line defines the number of log entries to buffer in RAM. A larger value reduces power consumption since the microSD card only needs to be powered up each time the buffer fills. In the default case, with a 6-second interval and 6-entry buffer, that's once every 36 seconds. Basically, you probably don't need to change this, but you can reduce the value to free up some RAM (to a minimum of one) and increase it if you're confident that there's enough free memory to do so.

The next two lines define how often and for how long the GPS unit is powered up, if it is connected. By default, the unit will wait for a lock for a maximum of five minutes and it will power up the GPS module once per hour to get a fresh reading. You can increase the timeout value if your logger will be in a marginal signal area but this will increase power consumption for those times where it can't get a lock.

Similarly, you can reduce the check interval to update the GPS co-ordinates more often than once per hour but this will also come with a power consumption penalty.

If the last line is removed, the unit will not print debugging messages on the serial console, other than log entries (as they are created). This reduces flash usage, as described in the text, making room for more code if required.

```
Date,Time,VA0,VA1,VA2,VA3,D0,D1,D2,D3,Temp,Pres,Lat,Lon,NumSats,SecondsSinceLock
29/06/2017,12:57:04,0.00,0.00,0.00,0.00,1,1,1,0,20.8,1.002,33.760280,151.280291,6,25
29/06/2017,12:57:10,0.00,0.00,0.00,0.00,1,1,1,0,20.7,1.002,33.760280,151.280291,6,31
29/06/2017,12:57:16,0.00,0.00,0.00,0.00,1,1,1,0,20.7,1.002,33.760280,151.280291,6,37
29/06/2017,12:57:22,0.00,0.00,0.00,0.00,1,1,1,0,20.6,1.003,33.760280,151.280291,6,43
29/06/2017,12:57:28,0.00,0.00,0.00,0.00,1,1,1,0,20.7,1.003,33.760280,151.280291,6,49
29/06/2017,12:57:34,0.00,0.00,0.00,0.00,1,1,1,0,20.7,1.004,33.760280,151.280291,6,55
29/06/2017,12:57:40,0.00,0.00,0.00,0.00,1,1,1,0,20.8,1.004,33.760280,151.280291,6,61
```

So those log entries show that the new sensor is working, giving us an indoor temperature reading of just over 20°C and a pressure of just over 1 bar. This modified sketch, titled **Arduino_Data_Logger_Barometer.ino**, is supplied in the download package. SC

# Logging data to the 'net using Arduino

**This circuit and software show how you can easily log data to the cloud from a remote location, using an ESP8266-based Arduino module.**

**By Bera Somnath**

ThingSpeak.com is a website supporting open source software on the "Internet of Things". It's basically a repository for remotely logged data that you can access to download your sensor data at any time. This circuit and software show how you can log data to it at a remote location easily, using an ESP8266-based Arduino-type module and retrieve it over the internet later.

The ESP8266 is a chip which combines a powerful ARM processor with a WiFi transceiver and antenna. We're using a WeMos D1 R2 which is compatible with the Arduino IDE but instead of an Atmel ATmega processor, it uses the ESP8266. It's a low-cost device that's readily available and contains everything you need to communicate over WiFi.

The parts required for this sample project can be acquired for under $20 and the result is a battery-powered device which measures its local temperature and humidity and then uploads them periodically to ThingSpeak.com You can view the logged results at any time using your PC.

## Setting up an account

Before using ThingSpeak you need to sign up for an account and "open a channel" for your logging device. To do this, you need a working email address. Once registered, you can create as many channels as you need. Simply go to https://ThingSpeak.com and follow the instructions to register and set up a channel.

Each channel has a channel ID, a "write" API key and a "read" API key. Note these down as we will need them later.

Each channel can contain up to eight streams of data. You can then assign names to these streams. Our example will log temperature and humidity from a DHT-22 sensor, so name the first two "temperature" and "humidity".

## Configuring the WeMos board

Fig.1 shows how we connect the DHT22 sensor to the WeMos board, along with a lithium rechargeable battery to power it and a small OLED display so we can see the current status. If you were to position one or more of these modules remotely, having gotten them working, you wouldn't need to connect the display.

Communication with the DHT22 is over a single-wire bus and this data pin is connected to digital I/O pin D5 of the WeMos module. The OLED display is driven via an $I^2C$ serial bus and this is wired to the hardware SCL (clock) and SDA (data) pins, D1 and D2, of the WeMos board. Both modules run off the same 3.3V supply as the WeMos module.

Not only does the WeMos ESP8266 board have onboard WiFi, saving you the hassle of connecting a shield for this task, as noted earlier, its processor is faster and it also has more memory. We got ours from AliExpress for less than $5.

Having installed the latest version of the Arduino IDE on your computer (if you didn't have it already), you will need to enable support for ESP8266-based boards. Open up preferences in the IDE and under "Arduino Board Manager URLs", enter:

http://arduino.esp8266.com/stable/package_esp8266com_index.json

Hit OK, then go to Tools → Boards → Board Manager, type in "esp8266" in the search box, click on the entry which appears below and then click on the "Install" button. This will result in around 160MB of compilers and associated files being downloaded and installed on your computer.

You can now go to the Tools → Board menu and select the "WeMos D1 R2 & mini" entry from the drop-down list. You will then need to install three

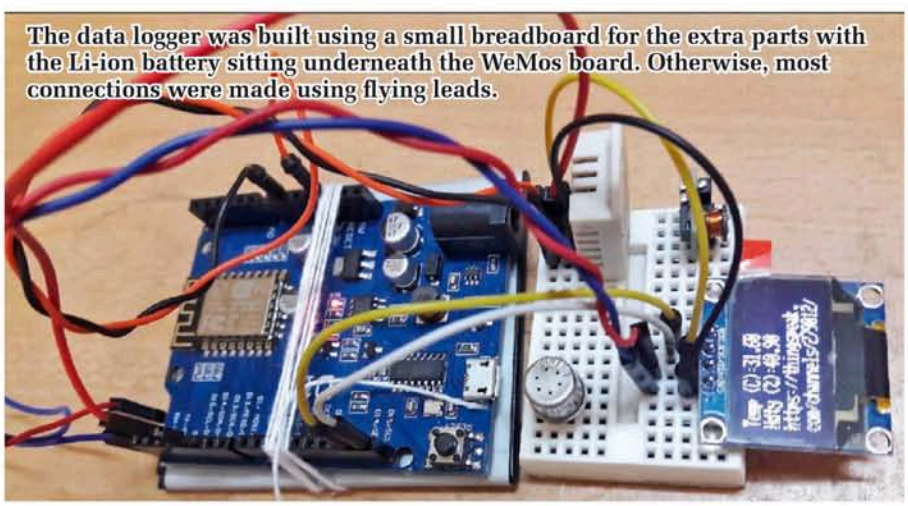

**The data logger was built using a small breadboard for the extra parts with the Li-ion battery sitting underneath the WeMos board. Otherwise, most connections were made using flying leads.**

Arduino libraries: DHT, OneWire and thingspeak-arduino. All three are supplied in the download package from the SILICON CHIP website, which also includes the sketch itself.

Then install these libraries using the Sketch → Include Library → Add .ZIP Library option, if you didn't have them already. You will then need to open up the sketch and modify it so that it can connect to your WiFi network and your ThingSpeak channel.

Change the ssid[] and pass[] strings to suit your WiFi network and the myChannelNumber and myWriteAPIKey strings to match those you noted earlier when setting up your ThingSpeak account. You can then compile/verify the sketch and it's ready to be uploaded to the WeMos board.

Having wired up the circuit as shown, with the battery disconnected, plug the WeMos board into your PC via USB, ensure the Arduino IDE is configured to use the correct port and then upload the sketch. It should spring into life straight away.

Once working, you can add more sensors later, which can be logged to the six spare streams in your channel.

## The software

The code is broadly divided into a few parts. The first few lines include the relevant headers, then create instances of the WiFi, DHT, OLED and ThingSpeak.com objects. The setup function initialises these objects by calling the begin() method then inside the main loop, it retrieves the temperature and humidity from the sensor and then transfers the data to ThingSpeak.com at thirty-second intervals.

The entire code is less than 70 lines, including the comments. If you eliminate the OLED-related lines, fewer than 30 remain.

If you look at the code, you will see the following lines:

```
ThingSpeak.writeField(
  myChannelNumber, 1, h,
  myWriteAPIKey); delay(15000);
  // ThingSpeak will only accept
  updates every 15 seconds.
ThingSpeak.writeField(
  myChannelNumber, 2, t,
  myWriteAPIKey); delay(15000);
  // ThingSpeak will only accept
  updates every 15 seconds.
```

These are responsible for uploading the sensor data to your ThingSpeak.com channel. The intervening function calls add a pause of fifteen seconds between each transmission.

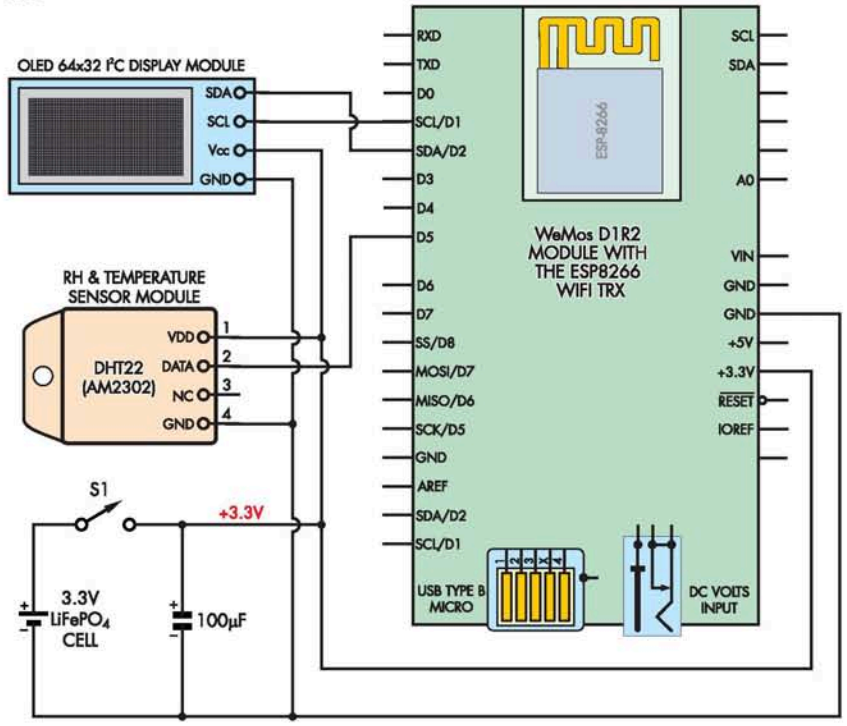


**Fig.1: block diagram showing the connections required to and from the WeMos module. The OLED module isn't required for it to run, and is used more as a convenience during set-up and debugging.**

## Power Consumption

While active, the unit draws around 80mA but most of this is the WiFi chipset. To reduce overall power consumption, the WiFi interface is put to sleep when not needed, reducing idle power consumption to 22mA, giving an average of around 30mA. If the optional OLED display is used, that adds another 40mA.

Without the OLED display, the device can run for hours on a small $LiFePO_4$ cell.

We recommend you use this type of rechargeable cell since its normal voltage range is close to the 3.3V that the WeMos board requires. SC

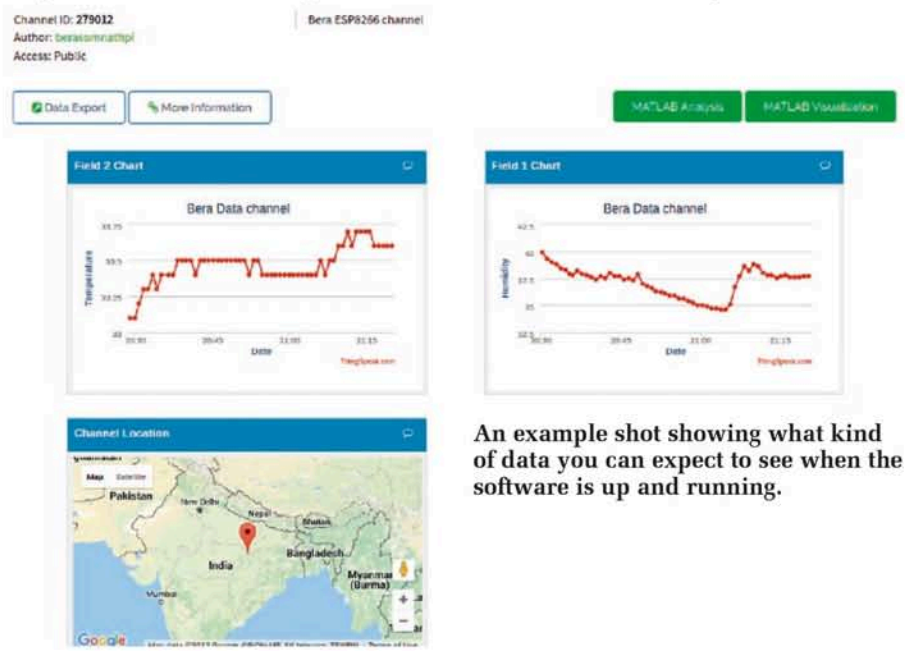


**An example shot showing what kind of data you can expect to see when the software is up and running.**

# The AD9850 DDS Module

**In the April issue, we covered the AD9833 Direct Digital Synthesiser (DDS) chip. This time, we're looking at modules based on its big brother, the AD9850. Typically combined with a 125MHz crystal oscillator, it can be programmed to produce sinewaves to beyond 40MHz, possibly accompanied by a square or pulse waveform. It is again controlled via an SPI serial interface.**

**We won't explain how** a DDS chip works again as we covered that quite thoroughly in the article mentioned above, in the April 2017 issue. There are a couple of modules using the AD9850 chip in conjunction with a 125MHz oscillator, with the one shown in the photos probably the most common. The other module is very similar in most respects, apart from having a different PCB layout.

In the module shown, the fact that the AD9850 is coupled with a 125MHz crystal oscillator means that it can be programmed to produce any output frequency from 0.0291Hz to over 62MHz in 0.0291Hz increments (more about the practical frequency limits later). This means it has a frequency range about five times that of the AD9833 with a resolution about 3.4 times finer (0.0291Hz compared with 0.1Hz).

Although the AD9850 doesn't provide the same choice of output waveforms as the AD9833, it does offer the basic sine waveform plus a derived rectangular waveform with bipolar outputs and an adjustable duty cycle. This allows it to produce anything from narrow positive pulses through to a square wave to narrow negative pulses.

The AD9850 chip itself is a little larger than the very tiny AD9833, but is still quite small. It comes in a 28-pin SSOP package, operates from either 3.3 or 5V and is described as low power – dissipating just 380mW when running with a 125MHz master clock from 5V, or only 155mW when operating from a 3.3V supply with a 110MHz master clock.

The AD9850-based module shown in the photos, which measures only 44.5 x 26mm and includes a 125MHz crystal oscillator, is currently being offered on eBay and AliExpress for prices ranging from A$9.80 to A$22.50, in many cases with postage included.

## Inside the AD9850

The block diagram of Fig.1 shows what's inside that compact 28-pin SSOP package. The main sections involved in basic DDS operation are those shown with a pale yellow fill. The high speed comparator at lower right is used for deriving the rectangular/square output waveform, as we'll see shortly.

Down at lower left is the 40-bit input register where data and instructions are loaded into the chip from almost any micro. With the AD9850, this can be done in two ways; in serial fashion via an SPI (Serial Peripheral Interface)

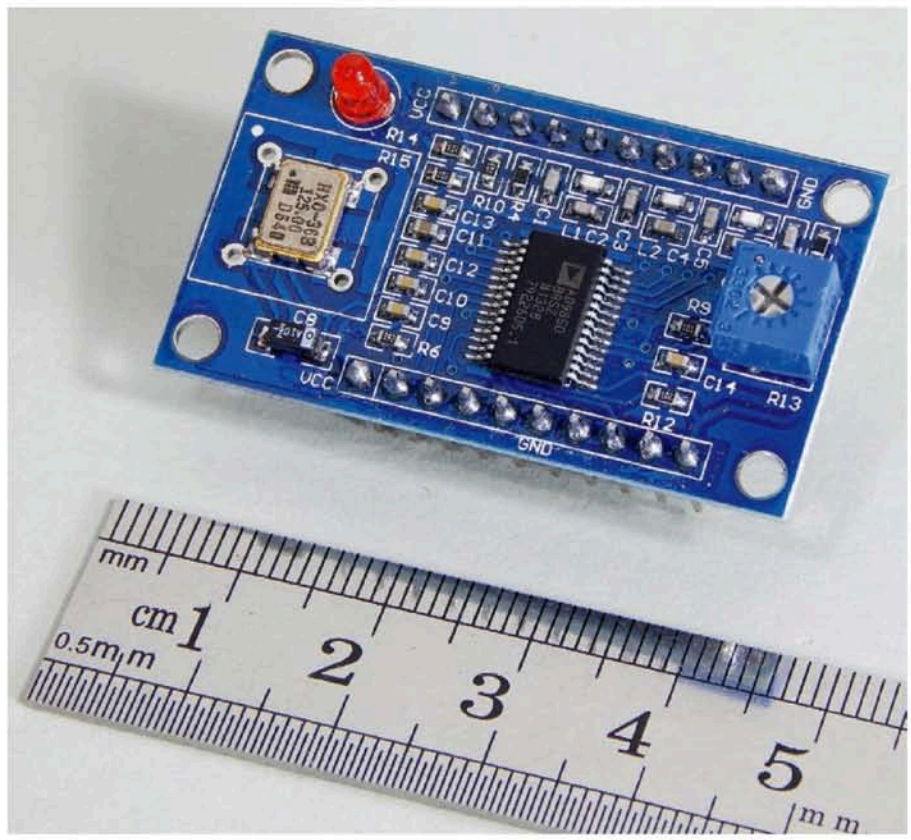


**The AD9850 module shown at approximately twice actual size.**

bus like the AD9833, or by parallel loading via an 8-bit data bus.

Since the AD9850 needs a 40-bit word rather than two 14-bit words, this means that programming it gets a little more complicated than the AD9833.

With serial loading via the SPI bus, all 40 bits must be sent in sequence, while with parallel loading they must be sent as a sequence of five bytes (8-bit words). In both cases, they must be sent to the chip in a particular order (LSB first) and with the 32-bit frequency word sent before the 8-bit control/phase word.

Returning to Fig.1, just above the input register is the frequency/phase data register, also of 40 bits. This stores the data used to program the DDS in terms of output frequency and phase modulation (if any).

Once the data has been loaded into the input register either serially or as five bytes, it is transferred into the frequency/phase register with a single positive-going pulse to the Frequency Update (FQ_UD) pin.

The high speed DDS "heart" of the AD9850 is shown at upper left in Fig.1, with its 125MHz master clock input labelled "Ref Clock Input". Then to the right of the DDS block is the very fast 10-bit DAC (digital to analog converter), used to provide the AD9850's main sinewave output. Note that the use of a 10-bit DAC gives the device a sinewave amplitude resolution of 1024 levels.

## The complete module

Now turn your attention to Fig.2, which shows the complete circuit for the 44.5 x 26mm module shown in the photos. It has quite a few components, comprising the AD9850 DDS chip (IC1) and its equally small (6.5 x 4.5mm) 125MHz crystal oscillator, a red power LED, seven SMD resistors, 14 SMD capacitors, three SMD inductors and a small trimpot.

10-way SIL connectors CON1 and CON2 provide all the signal and power connections to the module. Most of the pins of CON1 are used for the 8-bit parallel data input (apart from pin 1 for +5V power and pin 10 for ground), while the pins of CON2 are used for the SPI serial interface and the analog outputs.

Note that pin 25 of IC1 is both D7, the most significant bit of the parallel input (via pin 9 of CON1) and also the serial data (SDA) line of the SPI interface (pin 4 of CON2).

As shown on Fig.1, the AD9850's DAC has bipolar outputs and these emerge via pins 21 and 20, as shown in Fig.2. But only one of these is actually used within the module – the positive output from pin 21. The signal from this output passes through a low-pass filter formed by the three small inductors and their accompanying low-value capacitors, to remove as much of the DAC noise as possible before the output signal passes to pin 10 of CON2.

The negative DAC output from pin 20 is simply terminated in a 100Ω load and fed directly to pin 9 of CON2, without any filtering. So if you want to use this output, it will need external filtering.

One more thing to note regarding the AD9850's DAC is that its full-scale output current is set by the value of the resistor connected between pin 12 (DAC RSET) and ground. With the 3.9kΩ resistor supplied in the module, the full-scale output current is 10mA, which with the loading of approximately 100Ω gives a DAC output close to 1V peak-to-peak. This should be suitable for the majority of applications.

As well as going to pin 10 of CON2, the filtered positive DAC output is also connected to the positive input of the AD9850's high speed comparator (pin 16), via a 1kΩ resistor. The negative input of the comparator (pin 15) is fed with an adjustable DC voltage from the 10kΩ trimpot, the ends of which are connected to the +5V power rail and ground.

The trimpot thus provides a simple way to adjust the duty cycle of the rectangular output waveforms derived from the filtered positive DAC output by the action of the comparator. The rectangular outputs emerge from pins 14 and 13, and are taken directly to pins 7 and 8 of CON2.

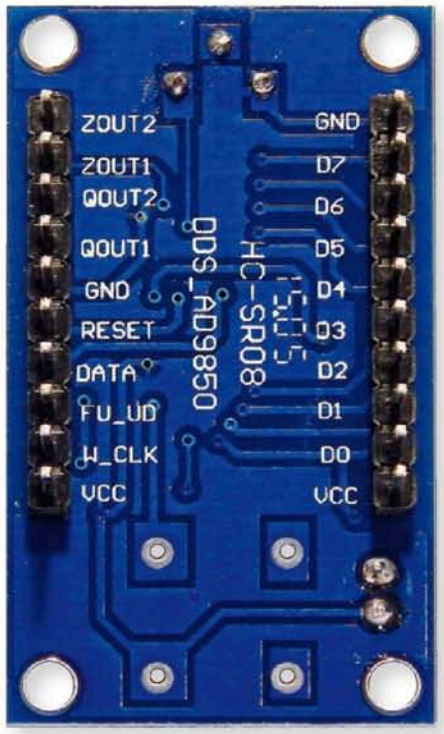


**This photo of the underside of the AD9850 DDS module shows the pin header connections that can be used with a Micromite or Arduino.**

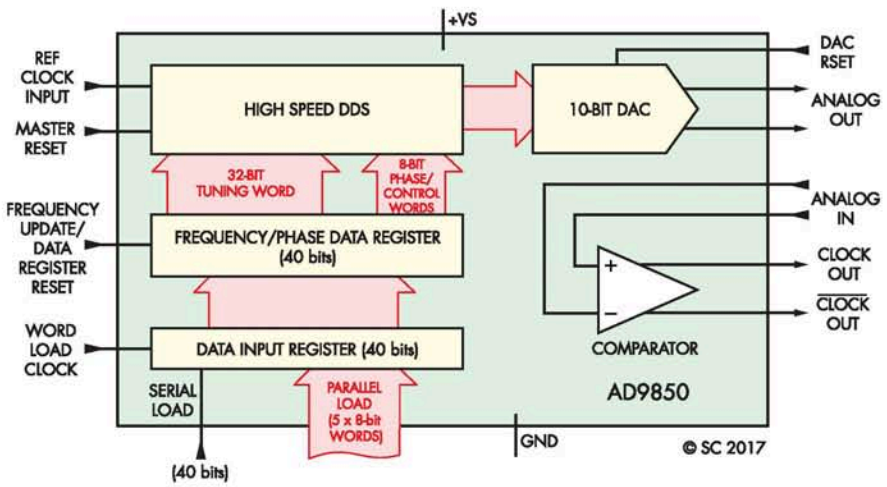


**Fig.1: internal block diagram of the AD9850 IC. This is somewhat simpler than the AD9833 featured previously as it has no facility to generate a triangle wave nor a square wave. However, the internal high-speed comparator at lower right can be used to generate a fixed or variable duty cycle square wave derived from the sinewave output and a DC reference voltage.**

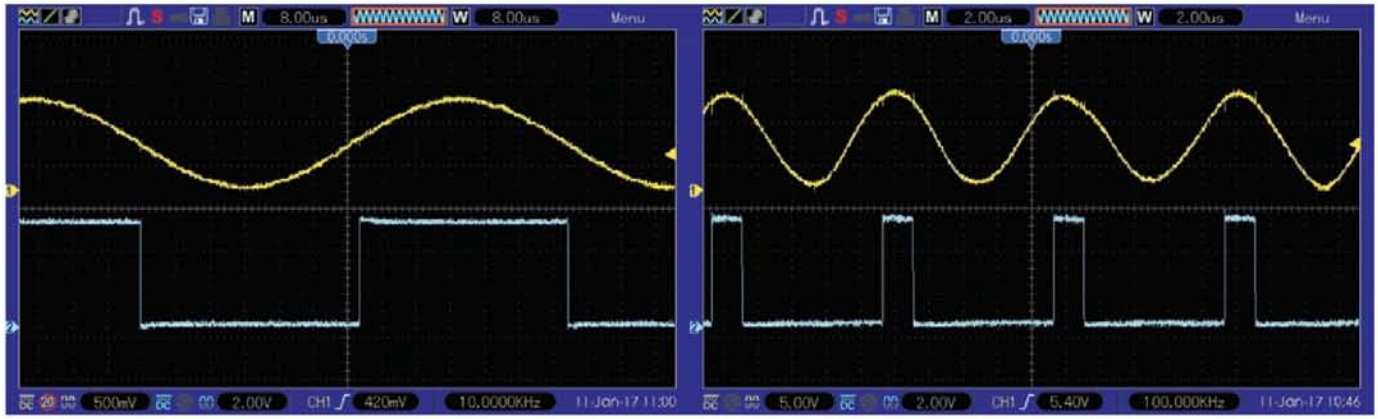

**From left to right: 10kHz, 100kHz, 1MHz, 10MHz waveform outputs from the AD9850 DDS module. The 25MHz and 40 MHz output graphs are shown overleaf.**

Note that the comparator outputs are both bipolar and symmetrical, ie, they are always mirror images of each other, regardless of the duty cycle setting set by the 10kΩ trimpot.

## Practical limitations

As with the AD9833, the main limitation of this module regards the maximum frequency that it can produce. In theory this is equal to the Nyquist frequency, or half the sampling clock frequency; in this case, 125MHz ÷ 2 or 62.5MHz.

But you need to bear in mind that because of the way a DDS works, the "sinewave" that it produces at this frequency will have very high distortion. If you want to get a reasonably smooth sinewave output, this will only be possible at frequencies below about 20% of the clock frequency, or in this case, a maximum of about 25MHz.

If you can tolerate a moderate amount of distortion, it should be possible to get nominal sinewaves at frequencies up to about 40-50MHz. That's why the module pictured is usually advertised as being capable of delivering sinewaves up to "40MHz and above".

## Programming it

Although the AD9850 is capable of being programmed by a parallel loading sequence of five bytes, we're going to concentrate on the SPI interface since it involves only five wires between the micro and the module, rather than the 11 wires needed for parallel loading; with most micro-based projects, it's easy to run out of free pins.

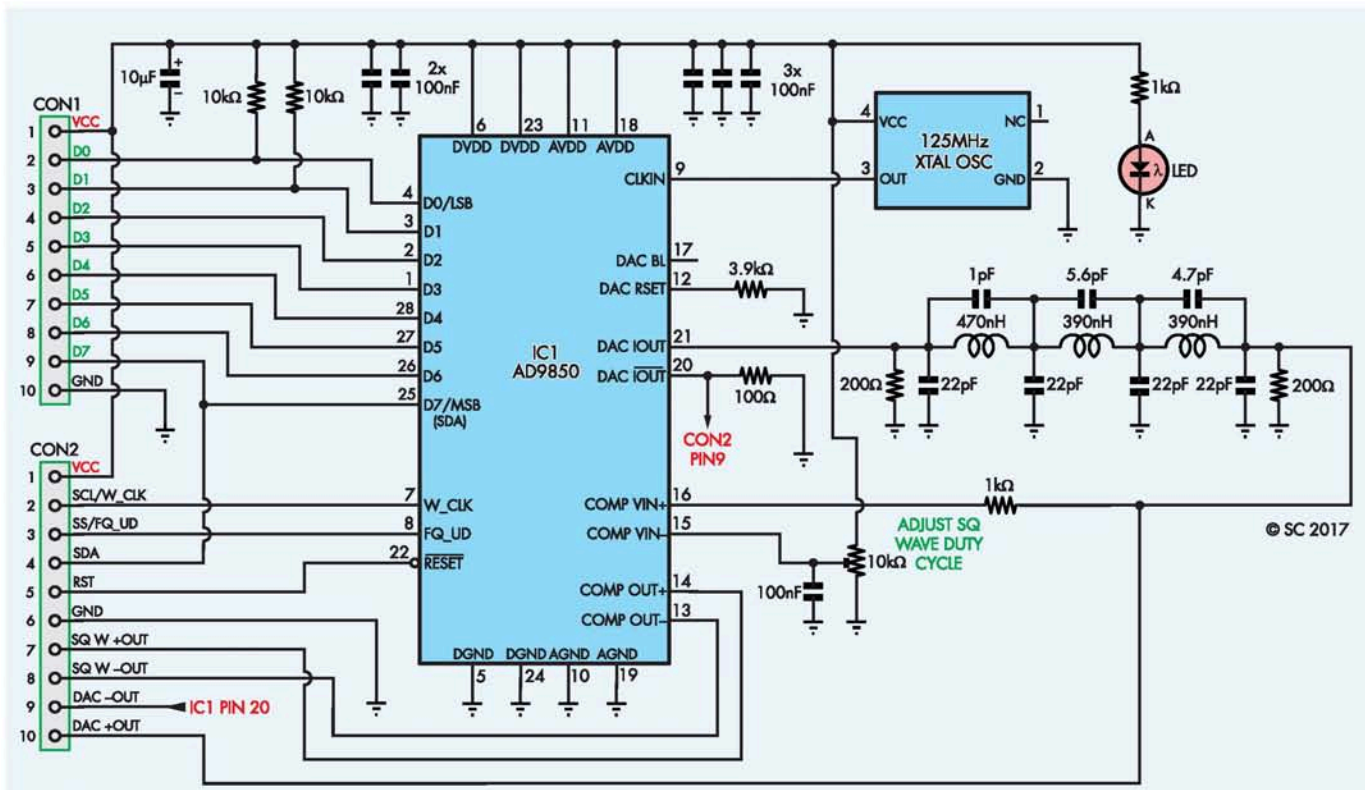


**Fig.2: circuit diagram for the AD9850-based DDS module. Besides the DDS IC and 125MHz crystal oscillator used to derive its output frequency, the main point of interest is the 7th order low-pass elliptic filter formed by three SMD inductors and a few small ceramic capacitors. This has a corner frequency close to 100MHz and a rapid fall-off, to reject the 125MHz+ switching artefacts from the DAC while leaving the generated signal largely untouched.**

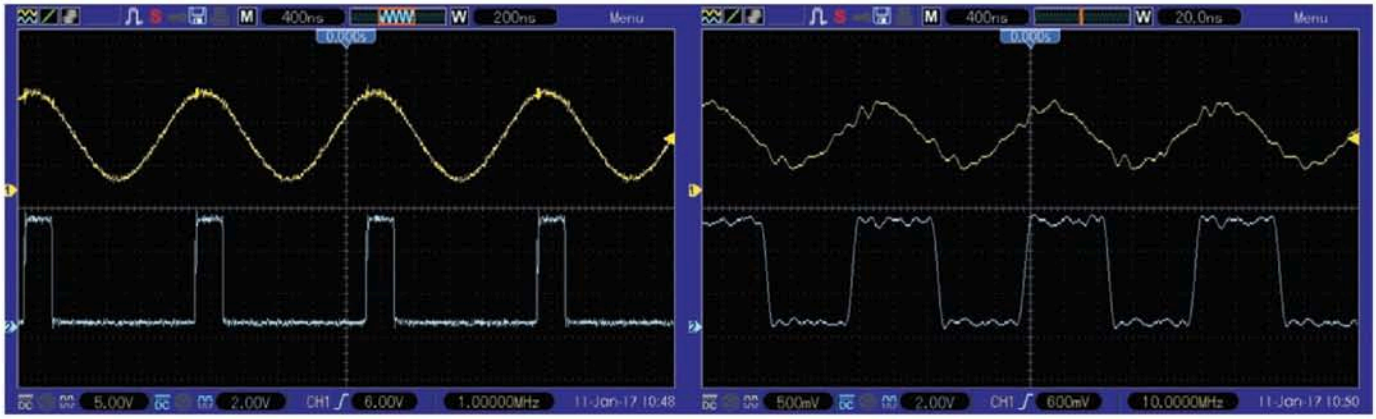

**While the AD9850 doesn't provide a direct way to produce a triangle or square wave, a fixed or variable duty cycle square wave can be derived from a generated sinewave plus a DC reference voltage using the internal comparator.**

We have summarised the basic coding for the frequency, control and phase registers graphically in Fig.3. The 40 bits making up the serial word are shown in a line along the top of the diagram, with the 32 frequency programming bits (red tint) on the left, followed by the three control bits and the five phase programming bits (blue tint) on the right.

The entire 40 bits must be sent to the AD9850 "LSB first", ie, B0, B1, B2, B3 and so on, right up to B39. When all 40 bits have been shifted into the AD9850's data input register, a short positive pulse is applied to the chip's FQ_UD/SS pin (pin 3 of CON2 in Fig.2), to load the data into the frequency/phase data register.

If you decide to use parallel loading instead of serial loading, the main difference is that you have to present bits B0-B7 to pins 2-9 of CON1 first, followed by a pulse to the W_CLK pin (pin 2 of CON2). Then you repeat this with bits B8-B15, B16-B23, B24-31 and finally B32-39.

Only after all five bytes have been loaded do you then need to apply a short positive pulse to the FQ_UD/SS to load it all into the frequency/phase register.

The formula to determine the DDS output frequency from the 32-bit frequency word is shown at bottom left in Fig.3. With a 125MHz clock and a 32 bit frequency word, the AD9850 has a minimum output frequency of 0.02910383Hz and this is also the minimum frequency increment. So the output frequency $F_{OUT} = \Delta_{PHASE} \times 0.02910383$. Or if you prefer, $\Delta_{PHASE} = F_{OUT} \div 0.02910383$.

For most purposes, you won't really have to worry about the final eight bits of that 40-bit programming word, because as you can see bits B32, B33 and B34 should be set to zero for normal operation, while bits B35-B39 should also be set to zero if you don't want to perform phase modulation.

So now we just need to connect the module up to our microcontroller. Note that we're only going to do that using the SPI serial interface.

## Driving it from an Arduino

There isn't much to it, as shown in Fig.4. Most of the connections can be made via the 6-pin ICSP header. These connections are quite consistent over just about all Arduino variants, including the Uno, Leonardo and Nano, the Freetronics Eleven and LeoStick, and the Duinotech Classic or Nano.

The only connection that's not available via the ICSP header is the one for SS/CS/FQ_UD, which needs to be connected to the IO10/SS pin of an Arduino Uno, Freetronics Eleven or Duinotech Classic as shown.

With other Arduino variants, you should be able to find the corresponding pin without too much trouble and even if you can't, the pin reference can be changed in your software sketch to match the pin you do elect to use.

One thing to bear in mind when you're writing your own sketch to program the AD9850 module is the requirement for the 40-bit programming word to be sent LSB first, instead of the usual MSB first.

And because the serial data on the SDATA/MOSI line is clocked into the chip on the rising edges of the SCLK pulses and SCLK must idle low, this means you need to set the SPI Settings parameters like this:

```
SPISettings(5000000, LSBFIRST,
  SPI_MODE0)
```

(where that first parameter is the serial clock frequency). Also, since the

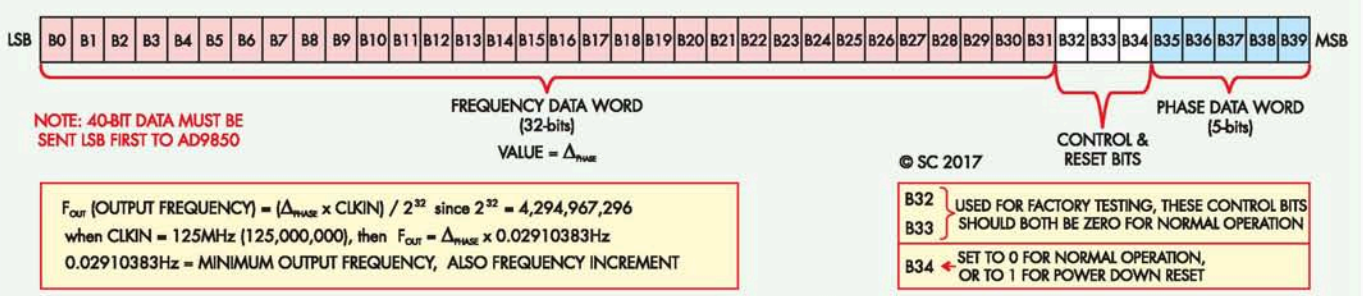


**Fig.3: format for loading frequency, phase and control data into the AD9850. 40 bits of data are shifted into the IC, least significant bit (LSB) first, with the first 32 bits setting the frequency, the next three bits controlling the power-down (sleep) mode and the final five bits setting the phase.**

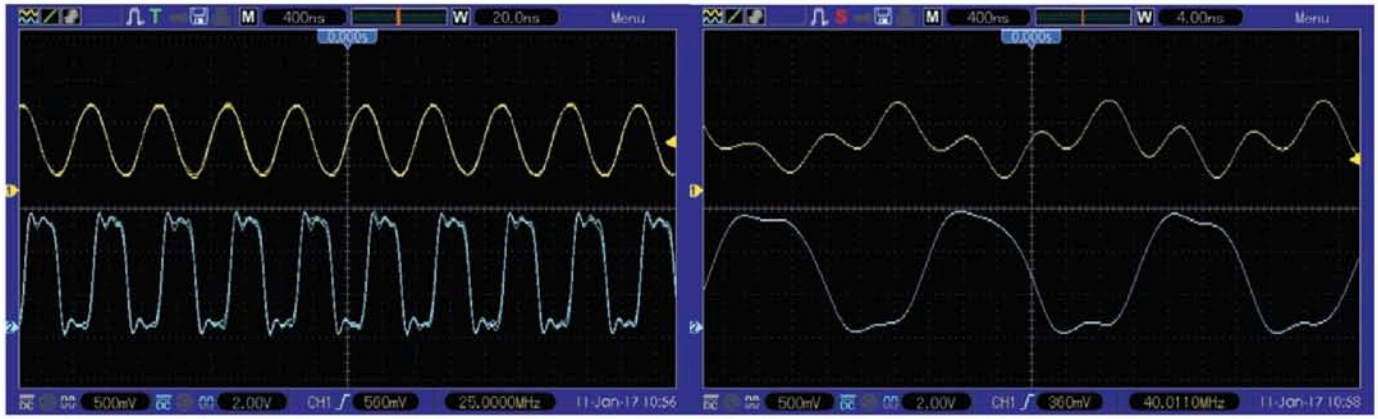

**You can see that once the frequency exceeds ~25MHz, a fair amount of distortion is introduced into the output.**

FQ_UD input of the AD9850 is active high, this line should be programmed to idle in the low state and only go high for loading the data into the AD9850's frequency/phase register.

If this sounds confusing, please refer to the example Arduino sketch I have written; more about this shortly.

## Driving it from a Micromite

It's also quite easy to drive the module from a Micromite, using the connections shown in Fig.5. By connecting the MOSI, SCK and SS/FQ_UD lines to Micromite pins 3, 25 and 22 as shown, MMBasic's built-in SPI protocol commands will have no trouble in communicating with the module.

Again, there is just one small complication, brought about by the AD9850's need to have the data sent to it LSB-first.

As MMBasic's SPI commands only have provision for MSB-first data transmission, your program needs to reverse the bit order before it's sent to the DDS.

You'll see one way of doing this in my example program for the Micromite, discussed below.

Note that if you're using the Micromite LCD BackPack, because the LCD touchscreen also communicates with the Micromite via its SPI port, your program needs to open the SPI port immediately before it sends commands or data to the module and then close the port again immediately afterwards to prevent any SPI conflicts. This is also illustrated in my example MMBasic program.

## Programming examples

The sample program for Arduino is called "sketch_for_testing_AD9850_DDS_module.ino". This simple program initialises the AD9850, programs it to generate a 100kHz sinewave, then informs you of the current frequency via the Serial Monitor utility built into the Arduino IDE.

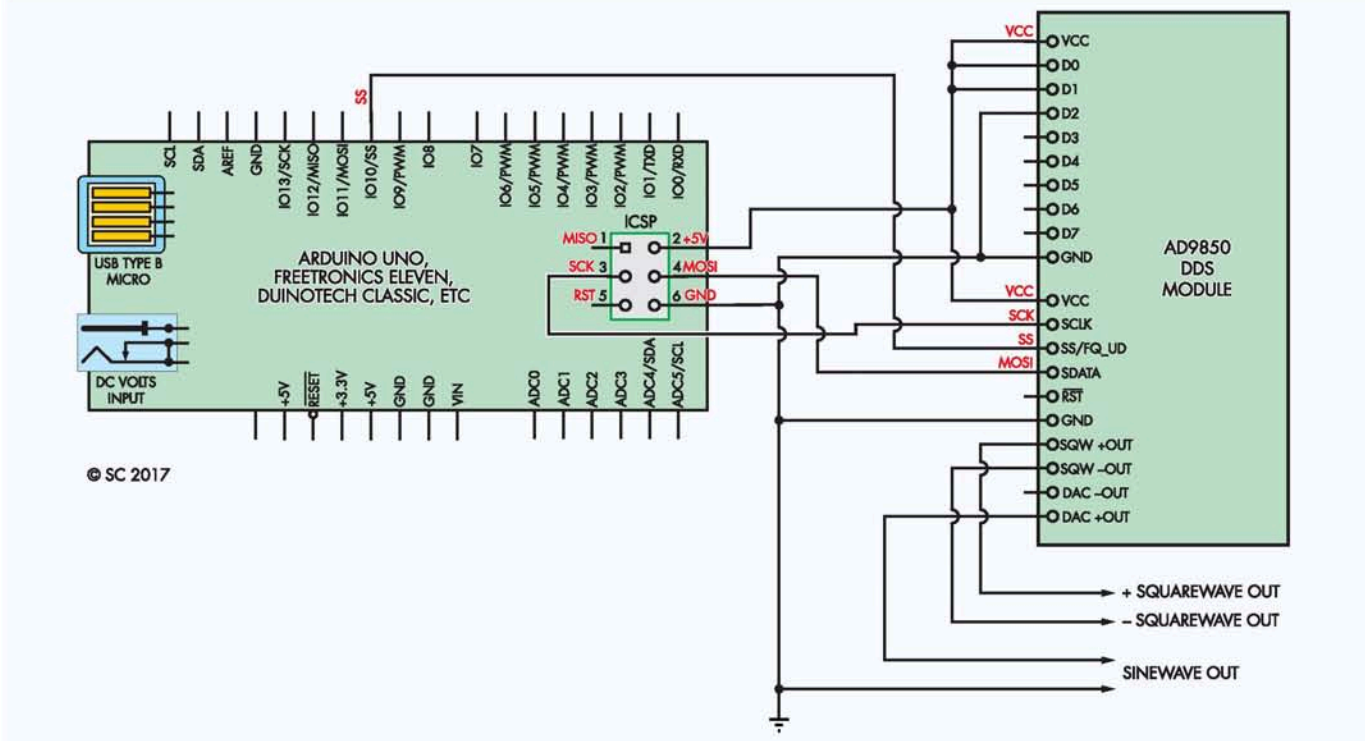


**Fig.4: as with many of the modules we've examined in this series of articles, connecting the AD9850 DDS module to an Arduino is quite simple. All you have to do is connect the 5V, GND and SPI signals to the ICSP header on the Arduino, leaving just the slave select (SS) pin which normally goes to I/O pin 10.**

At the same time, it gives you the opportunity to type a new frequency into the Serial Monitor and if you respond by typing in a new frequency and clicking on the Send button, it will load the new frequency into the AD9850 and repeat the process.

It's pretty straightforward, but it should demonstrate the basics of controlling the AD9850 DDS module from an Arduino.

The other program is written for the Micromite LCD BackPack and is called "Simple AD9850 sig gen.bas". This one is a little more complicated, partly because of the need to control the program's operation via the LCD touchscreen and partly because of the need to reverse the bit order of the 40 bits of data sent to the AD9850 because of its LSB-first requirement.

It again lets you control the AD9833's output frequency, in this case by using buttons and a virtual keypad on the BackPack's touchscreen. It's quite easy to drive and again, should show you how the AD9850 can be controlled via a Micromite.

Both of these programs are available from the SILICON CHIP website (www.siliconchip.com.au). SC

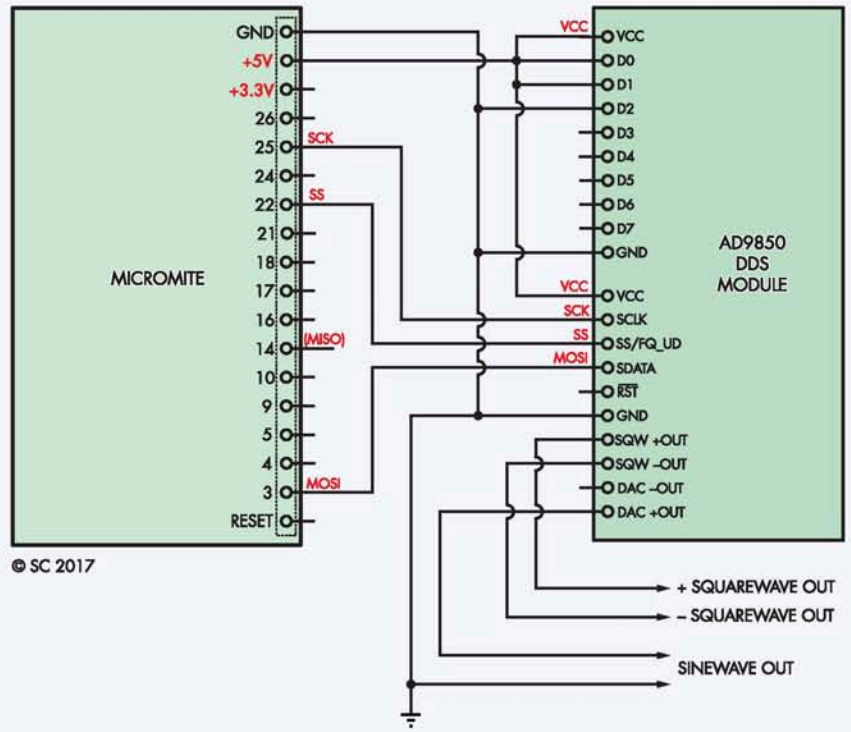


**Fig.5: again, wiring up this module to a Micromite is pretty straightforward. Check the instructions for your Micromite to determine the MOSI and SCK pins; as shown here, for the 28-pin Micromite and LCD BackPack, these go to pins 3 and 25. That just leaves 5V, GND and the slave select pin, which in this case we've wired to pin 22.**


**The SILICON CHIP Inductance - Reactance - Capacitance - Frequency READY RECKONER**

**For ANYONE in ELECTRONICS:**

**You'll find this wall chart as handy as your multimeter – and just as ESSENTIAL!**

Whether you're a raw beginner or a PhD rocket scientist . . . if you're building, repairing, checking or designing electronics circuits, **this is what you've been waiting for!** Why try to remember formulas when this chart will give you the answers you seek in seconds . . . easily! Read the feature in the January 2016 issue of SILICON CHIP (*you can view it online*) to see just how much simpler it will make your life! All you do is follow the lines for the known values . . . and read the unknown value off the intersecting axis. It really is that easy – and quick (much quicker than reaching for your calculator!

- **Printed on heavy (200gsm) photo paper**
- **Mailed flat (rolled in tube) or folded**
- **Limited quantity available**

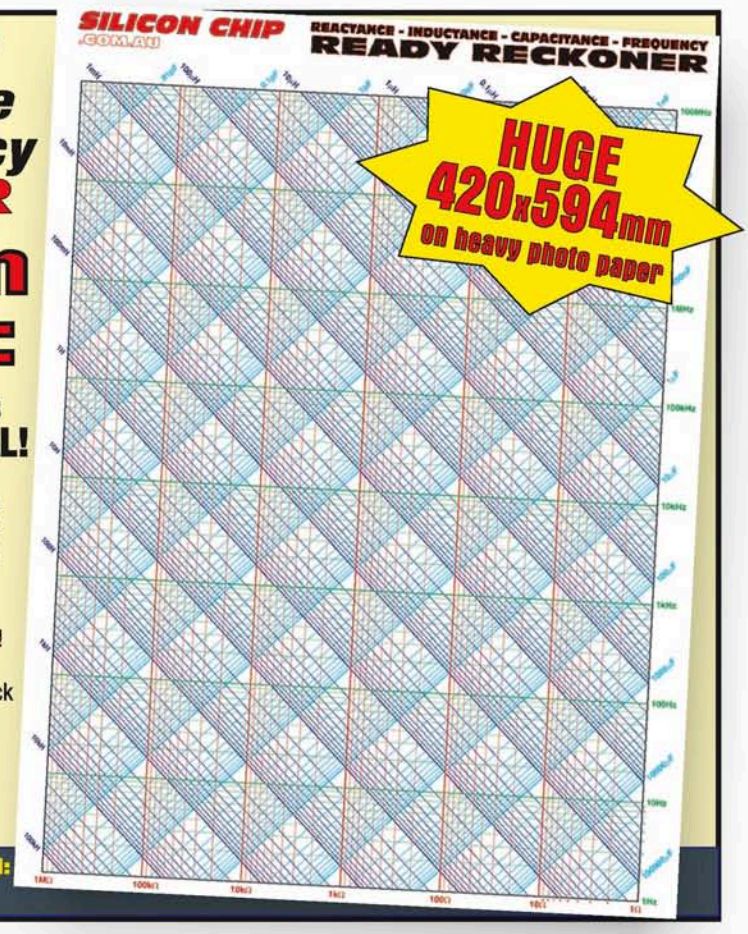


**Mailed Rolled: $20.00** inc P&P & GST

**ORDER NOW AT** www.siliconchip.com.au/shop

**Mailed Folded: $10.00** inc P&P & GST

FIND
MORE
FREE
MAGAZINES

FREEMAGS.CC

# Vintage Radio

By Ian Batty

# The 3-transistor Philips MT4 Swingalong

**The Philips MT4 is quite an unusual set and not only for its minuscule transistor count. It is styled as a mantel radio but being battery-operated and quite compact, it can easily double as a portable. Perhaps its most interesting aspect is that it is a reflex superheterodyne circuit which means that one section handles both RF and audio signals.**

I seem to be getting a reputation as an enthusiast for interesting and unusual radios. This set was offered to me for review by a fellow member of the Historical Radio Society of Australia (HRSA), Ron Soutter.

It has to be the most minimal set I've looked at so far. Forget 7-transistor sets such as the Stromberg-Carlson 78T11 (SILICON CHIP, July 2015, www.siliconchip.com.au/Article/8710) or the Philips 198 (June 2015, www.siliconchip.com.au/Article/8612) or the many 6-transistor sets I've looked at. And let's set aside Astor's 5-transistor M5 and the 4-transistor GE 2105 that, despite having only four transistors, could certainly hold its own.

The Philips MT4 Swingalong uses just three transistors! And surprisingly, it works pretty well. Add in its price of around $410 in today's money (actually £14.10s.6d in 1965) compared to a 7-transistor set at some $560 and I could imagine the Swingalong walking off the shelves.

## First impressions of the MT4

I'm beginning to think I really have been too serious with my emphasis on performance measurements. With just three transistors, the MT4 is able to compete with five, six and 7-transistor sets for ordinary listening in the suburbs.

It may also work OK in the country but I've moved down the Peninsula to Rosebud. That said, I am still some 75km from the transmitter; not much closer than the previous 95km or so.

I'm getting good reception in the kitchen and even from some of the more remote stations such as 3WV in Horsham, broadcasting on 594kHz, are just detectable out of doors. Close examination of the dial shows city stations in all states but a smaller roll call of regionals of the day. Perhaps it's a de facto admission of the MT4's modest sensitivity. We'll find out how good it is later.

We're familiar with the "sinking ship" school of engineering by now, as in "get rid of anything which is not absolutely necessary". But how is anyone going to get any kind of performance with only three transistors? There's only one way to do it and the Philips MT4 resurrects an idea from the valve days: reflexing. The idea is simple; use one (or more) amplifying stages simultaneously at two widely-differing frequencies.

**Maybe the inspiration behind the nickname "Swingalong" came from a Frank Sinatra song or perhaps a Canadian music TV show of the name. But no matter the source, the name was on the rear of the MT4's plastic case.**

The idea became public over 100 years ago with the 1914 awarding of US patent US1087892 to Schloemilch and von Bronk. Note that this is still a superheterodyne set, with a self-oscillating converter stage feeding an IF (intermediate frequency) transformer and then a stage which handles both the modulated 455kHz intermediate frequency and the demodulated audio signal.

Reflexing has been popular at various times. Early sets, with valves costing as much as a week's wages, had to offer useful performance at a price that listeners could afford. Reflexed stages cut cost but they need careful design, and the "minimum volume" problem bedevilled valve designs for years.

The effect is caused by signal rectification at the grid of the reflexed IF amplifier in addition to the demodulator diode. The grid-rectified signal commonly acts in anti-phase to the audio coming back from the demodulator.

This gives the counter-intuitive effect that, since the two audio signals are in opposition; turning the volume control to zero (i) eliminates the audio from the demodulator, but (ii) still allows any grid-rectified signal to be amplified. Typically, it's not until the control is advanced "a little" from zero that complete cancellation – and thus zero volume – occurs.

Some valve radios (such as Astor's Aladdin FG, reviewed in August 2016) did use reflexing and seemed to have eliminated the problem.

But how about reflexing in transistor radios? This is the first such set I've come across, though I have seen a few circuit drawings also using reflexing. The design itself is pretty simple. Converter TR1, an alloy-diffused PNP germanium OC169/AF117, uses conventional combination biasing and collector-emitter feedback.

This design allows signal injection into the base, simplifying fault-finding and alignment. While converters using collector-base feedback work just fine, it's common to find that injecting a tests signal to the base stops the local oscillator dead.

The converter stage first feeds the first IF transformer and then the oscillator coil. This is the reverse of the usual arrangement, but it seems to work just as well. By the way, as was the usual practice with early transistor radios which mostly used PNP germanium transistors, the chassis is positive, not negative. This aspect can be confusing when you are working your way through the circuit.

The ferrite aerial rod is a full-length type, so I expected fairly good signal pickup. Usually, there's about a 10:1 ratio, meaning that a field strength of, say, 500µV/m gives about 50µV signal at the converter base.

The 2-section tuning gang is a cut-plate design. Don't let the identical shape of the moving plates in both sections fool you, as it's the stationary plates that differ in shape, to give good tracking between the oscillator (C3) and aerial tuning (C1) without the use of a padder capacitor. First IF transformer L6/7-L8 uses the familiar tuned, tapped primary and untuned, untapped secondary.

## Reflexed second stage

It's the circuit around TR2, another OC169/AF117, that is unusual. First, volume control R5 attenuates the IF signal from the first IFT's L8 secondary as it is turned down. We've seen this approach with the Astor Aladdin FG, where the reflexed second IF stage also had the volume control in the IF signal path.

This approach should eliminate the minimum-volume effect and it's notable that Langford Smith (writing in Radiotron Designer's Handbook, 4th edition) shows the volume control in the audio path between the demodulator and the grid of the reflexed stage (it's a contrast to this set and the FG). Langford Smith's design would permit grid rectification and thus accentuate the minimum volume effect.

Setting the volume control's IF attenuation aside, TR2 works as expected. Bias is supplied through a high-value base resistor (R4, 120kΩ) and is balanced by the AGC voltage fed back from demodulator diode D1 via the 8.2kΩ resistor, R6. There's one wrinkle: TR2's 33Ω emitter resistor has no bypass capacitor, so emitter degeneration slightly reduces the gain of the stage.

TR2's collector feeds the second IFT's primary, L9/10, which form a tuned, tapped winding. Untapped, untuned secondary L11 feeds IF signals to demodulator D1, a germanium OA71. D1 feeds AGC voltage and the demodulated audio back to the base of TR2. Since R6 would attenuate the audio markedly, it's shunted for audio signals by the 220nF capacitor C9.

**A close-up of the dial shows that it had station markings for all of the Australian states.**

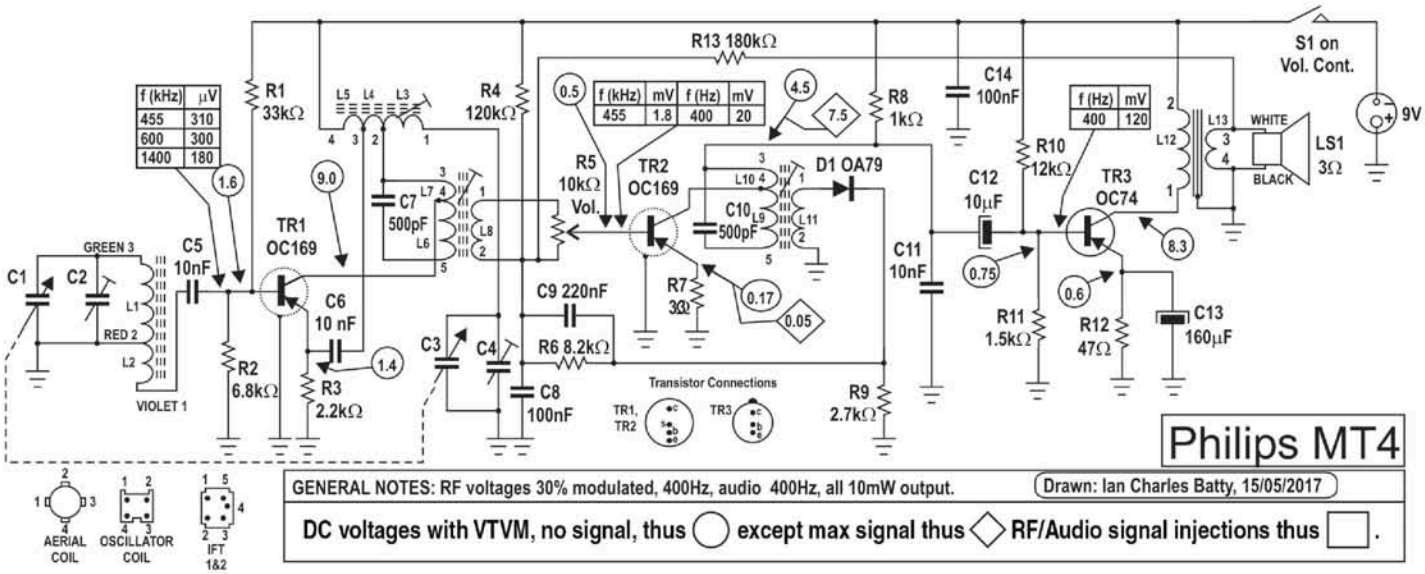


**Fig.1: the circuit of the Philips MT4 is quite unusual in that the second stage involving transistor TR2 is reflexed. This means that it amplifies the 455kHz intermediate frequency as well as the recovered audio from diode D1. This approach enabled good gain with only a limited transistor count.**

Now, TR2 is set up as an audio amplifier (even though it also amplifies the IF signal). First, volume control R5 will have little effect on audio gain (in theory), as it's shorted (for audio) by the 1st IFT's low-resistance L8 secondary; more on this later.

So TR2 gets the demodulated audio on its base and the amplified audio signal appears at its collector. Its audio load is the 1kΩ resistor, R8. Any IF signal appearing across R8 is shunted by 10nF capacitor C11 and the audio signal is fed via 10µF capacitor C12 to the base of output transistor TR3, an alloyed-junction OC74.

TR3 is a conventional Class-A stage, drawing a constant 13mA of collector current. This is a lot more than a comparable Class-B push-pull stage with no signal, and is why the set uses the large 276P battery.

It's around 51 x 63 x 80mm. The original battery (with a capacity of 1500mAh) would give some 100-plus hours of playing time; modern equivalents would approach 500 hours.

With a supply voltage of 9V, TR3 dissipates about 115mW. Theory implies that the maximum output power could be around 50mW, so can its Class-A stage do much better than previous review sets? We will see.

TR3 drives the primary of output transformer L12-L13, which in turn drives the 3Ω speaker. Finally, there's negative audio feedback from the speaker to the base of the IF/audio amplifier, TR2, via 180kΩ resistor R13.

## Alloy-diffused transistors

As described in my article on the Grundig Taschen Transistor Boy (December 2016, www.siliconchip.com.au/Article/10485), Philips began transistor production with the second generation of junction transistor technology – alloyed junctions. While these could reliably produce the trusty OC44/45 RF/IF transistors, an operating frequency of some 15MHz was about the limit.

The problem – as it has been since Bardeen and Brattain's first examples – was to get the active base region as thin as possible. Alloying, relying as it does on two mutually-dissolving materials (a bit like lead and tin in solder) could not produce base layers fine enough for very high-frequency operation.

The third generation of transistors combined established alloying techniques with the newer principle of diffusion at near-melting temperatures. Diffusion of a gas, or a metal vapour, can be made to progress into a substrate more slowly and with much greater control.

Construction began by working just one side of the transistor die. The bottom side would become the collector (let's say P-type) and the N-type base layer would be diffused from the top down into the collector. So far, we would just have a very good diode.

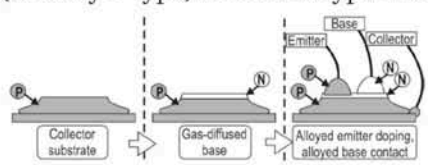


**This diagram shows the steps to produce analloy-diffused transistors.**

But now, placing a P-type dot onto the base surface and using alloying, the emitter could be formed on top of the base layer, giving the familiar PNP "sandwich" construction. Alloy-diffused OC169/170/171 transistors were used in the front ends of FM tuners, and the 175MHz AF118 was used as a video amplifier.

Diffused-alloy transistor construction is a bit of a mix-and-match, but (i) it gets away from the messy "two-sided" manufacturing of purely-alloyed devices and allows greater automation, and (ii) the combination of diffusion and alloying finally produced transistors such as the AF186, able to work to over 800MHz.

## Clean-up and alignment

I received the set in good condition. Apart from a cabinet clean and a contact spray for the noisy volume pot, it was ready for the test bench and the photo session.

Some restorers prefer to leave sets "as is", unless the performance is obviously lacking. But every set I've reviewed so far has benefited from a basic alignment. Original factory settings may have been a bit less than optimal and it's normal for the alignment to drift over many decades.

This set responded to local oscillator adjustment at the bottom end, with sensitivity coming up some 2~3 times. The IFTs came out spot on.

**The Philips MT4 was equipped with a full-size ferrite rod antenna which ensured good signal pickup. The PCB on the left was quite compact given the relative complexity of the circuit. The large space on the right accommodated the Eveready 276P battery which gave somewhat more than 100 hours of life.**

The audio injection of 20mV at TR2's base may seem high. As usual, I've relied on my generator's output meter rather than the actual injection voltage, as readers may not have audio millivoltmeters to hand that would allow measurement of actual audio levels during testing. I did check the circuit voltages, and found around 7mV at TR2's base and 35mV at TR3's base. That's more in line with the signal levels in other sets.

I found the antenna and oscillator trimmers, on the "inside" end of the gang and hidden behind the ferrite rod bracket, very difficult to access. I'd have (i) spun the gang around 180º or (ii) used a gang with trimmers on the other end.

## How good is it?

It's certainly not in the same league as the earlier Philips 198; almost nothing is. But it's a creditable performer given its simplicity. As described below, maximum output is under 20mW, so all testing was done at 10mW output.

Sensitivity (10mW output) is 1.6mV/m at 600kHz, 1mV/m at 1400kHz, and it achieves these figures with better than 20dB signal-to-noise ratio. These figures reflect the lower RF/IF gain caused by a single IF stage not amplifying converter noise as much as a two-stage IF channel does. The AGC is rudimentary; output increased by 6dB for an input rise of only 15dB, after which output fell rapidly as the converter overloaded.

IF bandwidth is ±1.3kHz at 3dB down. Testing it at -60dB was impractical, however, it did show a -30dB bandwidth of some ±12kHz; again confirming its simplified IF channel configuration.

Audio response from the volume control to speaker is about 240Hz to 8kHz with a 2dB peak around 1kHz. It's another set that could have used some top cut. From aerial to speaker it's 200Hz to 1.9kHz. Distortion at 10mW is creditably low at 2.5%, but it rises rapidly, reaching 10% and clipping at around 15mW output.

The volume control does have most effect on the IF signal, as full rotation of the pot only reduced the audio gain by some -3dB. It's essentially an IF attenuator rather than an audio one.

With a collector current of some 13mA, the output stage only manages some 15mW out while drawing around 115mW from the battery, so the output stage efficiency is only around 15%. It's another example of real-world output stages failing to approach Class A's theoretical maximum of 50% efficiency.

Against this, the converter's best sensitivity of some 180µV, for an air field of only 1mV/m, shows efficient coupling from the antenna rod to the converter base.

How good is it? Like the GE T2105, it's a good performer in just about every setting. Having described the GE T2105 as cheap and cheerful, I'm going to tag the MT4 similarly – budget designs can work and quite well. Whoever designed this set did some pretty clever engineering, combining adequate performance with minimum complexity.

## Would I buy one?

This set will go back to its generous owner but I'd like to have an example. It's a good performer and a reminder of how much performance a fine engineering team can get out of simple circuitry. And yes, one showed up at the HRSA's Radio Market in June at a great price. Not a member?

Go to www.hrsa.asn.au and take up the invitation.

## Further reading

My special thanks to Ron Soutter of the HRSA for the loan of his set and the original circuit diagram, which I have redrawn (Fig.1).

You'll also find the MT4 on Ernst Erb's Radiomuseum: www.radiomuseum.org/r/philipsaus_mt_4.html SC

# SILICON CHIP .com.au/shop ONLINESHOP

Looking for a specialised component to build that latest and greatest *Silicon Chip* project? Maybe it's the PCB you're after? Or a pre-programmed micro? Or some other hard-to-get "bit"? The chances are they are available direct from the *Silicon Chip* ONLINESHOP.

As a service to readers, *Silicon Chip* has established the ONLINESHOP. No, we're not going into opposition with your normal suppliers – this is a direct response to requests from readers who have found difficulty in obtaining specialised parts such as PCBs & micros.

- PCBs are normally IN STOCK and ready for despatch when that month's magazine goes on sale (you don't have to wait for them to be made!).
- Even if stock runs out (eg, for high demand), in most cases there will be no longer than a two-week wait.
- One low p&p charge: $10 per order, regardless of how many boards or micros you order! (Australia only; overseas clients – email us for a postage quote).
- Our PCBs are beautifully made, very high quality fibreglass boards with pre-tinned tracks, silk screen overlays and where applicable, solder masks.
- Best of all, those boards with fancy cut-outs or edges are already cut out to the *SILICON CHIP* specifications – no messy blade work required!

## HERE'S HOW TO ORDER:

VISA MasterCard PayPal

*All prices are in AUSTRALIAN DOLLARS ($AU)*

✔ **Via the INTERNET** (24 hours, 7 days): Log on to our secure website – siliconchip.com.au, click on "SHOP" and follow the links

✔ **Via EMAIL** (24 hours, 7 days): email silicon@siliconchip.com.au – Clearly tell us what you want and include your contact and credit card details

✔ **Via MAIL** (24 hours, 7 days): PO Box 139, Collaroy NSW 2097. Clearly tell us what you want and include your contact and credit card details

✔ **Via PHONE** (9am-5pm EADST, Mon-Fri): Call (02) 9939 3295 (INT 612 9939 3295) – have your order ready, including contact and credit card details!

**YES! You can also order or renew your SILICON CHIP subscription via any of these methods as well!**

## PRE-PROGRAMMED MICROS

Price for any of these micros is just $15.00 each + $10 p&p per order#

As a service to readers, *Silicon Chip OnLineShop* stocks microcontrollers and microprocessors *used in new projects* (from 2012 on) and some selected older projects – pre-programmed and ready to fly!

| | |
|---|---|
| **PIC12F675-I/P** | UHF Remote Switch (Jan09), Ultrasonic Cleaner (Aug10), Ultrasonic Anti-fouling (Sep10), Cricket/Frog (Jun12), Do Not Disturb (May13) IR-to-UHF Converter (Jul13), UHF-to-IR Converter (Jul13) PC Birdies *2 chips – $15 pair* (Aug13), Driveway Monitor Receiver (July15) Hotel Safe Alarm (Jun16), 50A Battery Charger Controller (Nov16) |
| **PIC16F1455-I/P** | Microbridge (May17) |
| **PIC16F1507-I/P** | Wideband Oxygen Sensor (Jun-Jul12) |
| **PIC16F88-E/P** | Hi Energy Ignition (Nov/Dec12), Speedo Corrector (Sept13), Auto Headlight Controller (Oct13), 10A 230V Motor Speed Controller (Feb14) Automotive Sensor Modifier (Dec16) |
| **PIC16F88-I/P** | Projector Speed (Apr11), Vox (Jun11), Ultrasonic Water Tank Level (Sep11) Quizzical (Oct11), Ultra LD Preamp (Nov11), 10-Channel Remote Control Receiver (Jun13), Revised 10-Channel Remote Control Receiver (Jul13) Nicad/NiMH Burp Charger (Mar14), Remote Mains Timer (Nov14) Driveway Monitor Transmitter (July15), Fingerprint Scanner (Nov15) MPPT Lighting Charge Controller (Feb16), 50/60Hz Turntable Driver (May16) Cyclic Pump Timer (Sep16), 60V 40A DC Motor Speed Controller (Jan17) Pool Lap Counter (Mar17), Rapidbrake (Jul17) |
| **PIC16LF88-I/P** | Garbage Reminder (Jan13), Bellbird (Dec13), GPS Analog Clock Driver (Feb17) |
| **PIC16LF88-I/SO** | LED Ladybird (Apr13) |
| **PIC16LF1709-I/SO** | Battery Cell Balancer (Mar16) |
| **PIC16F877A-I/P** | 6-Digit GPS Clock (May-Jun09), Lab Digital Pot (Jul10), Semtest (Feb-May12) |
| **PIC16F2550-I/SP** | Batt Capacity Meter (Jun09), Intelligent Fan Controller (Jul10) |

*Some micros from copyrighted and/or contributed projects may not be available.*

| | |
|---|---|
| **PIC18F4550-I/P** | GPS Car Computer (Jan10), GPS Boat Computer (Oct10) |
| **PIC32MX795F512H-80I/PT** | Maximite (Mar11), miniMaximite (Nov11), Colour Maximite (Sept/Oct12) Touchscreen Audio Recorder (Jun/Jul 14) |
| **PIC32MX170F256B-50I/SP** | Micromite Mk2 (Jan15) – *also includes* **FREE** *47µF tantalum capacitor* Micromite LCD BackPack [either version] (Feb16), GPS Boat Computer (Apr16) Micromite Super Clock (Jul16), Touchscreen Voltage/Current Ref (Oct-Dec16) Micromite LCD BackPack V2 (May17), Deluxe eFuse (Aug17) **Micromite DDS for IF Alignment (Sept17)** |
| **PIC32MX170F256B-I/SP** | Low Frequency Distortion Analyser (Apr15) |
| **PIC32MX170F256D-501P/T** | 44-pin Micromite Mk2 (Now with Mk2 Firmware at no extra cost) |
| **PIC32MX250F128B-I/SP** | GPS Tracker (Nov13), Micromite ASCII Video Terminal (Jul14) |
| **PIC32MX470F512H-I/PT** | Stereo Audio Delay/DSP (Nov13), Stereo Echo/Reverb (Feb 14) Digital Effects Unit (Oct14) |
| **PIC32MX470F512H-120/PT** | Micromite PLUS Explore 64 (Aug 16), Micromite Plus LCD BackPack (Nov16) |
| **PIC32MX470F512L-120/PT** | Micromite PLUS Explore 100 (Sep-Oct16) |
| **dsPIC33FJ128GP802-I/SP** | Digital Audio Signal Generator (Mar-May10), Digital Lighting Controller (Oct-Dec10), SportSync (May11), Digital Audio Delay (Dec11) Quizzical (Oct11), Ultra-LD Preamp (Nov11), LED Musicolor (Nov12) |
| **dsPIC33FJ64MC802-E/P** | Induction Motor Speed Controller (revised) (Aug13) |
| **dsPIC33FJ128GP306-I/PT** | CLASSiC DAC (Feb-May 13) |
| **ATTiny861** | Thermometer/Thermostat (Mar10), Rudder Position Indicator (Jul11) |
| **ATTiny2313** | Remote-Controlled Timer (Aug10) |

**When ordering, be sure to nominate BOTH the micro required AND the project for which it must be programmed.**

## SPECIALISED COMPONENTS, HARD-TO-GET BITS, ETC

P&P – $10 Per order#

**NEW THIS MONTH:**

**3-WAY ADJUSTABLE ACTIVE CROSSOVER** *(SEPT 17)*
- set of laser-cut black acrylic case pieces — $10.00

**LOGGING DATA TO THE 'NET USING ARDUINO** *(SEPT 17)*
- WeMos D1 R2 board — $12.50

**DELUXE EFUSE PARTS** *(AUG 17)*
IPP80P03P4L04 P-channel mosfets — $4.00 ea
BUK7909-75AIE 75V 120A N-channel SenseFet — $7.50 ea
LT1490ACN8 dual op amp — $7.50 ea

**ARDUINO MUSIC PLAYER/RECORDER** *(JUL 17)*
Geeetech Arduino MP3 shield — $20.00

**ARDUINO LC METER** *(JUN 17)*
1nF 1% MKP capacitor, 5mm lead spacing — $2.50

**MAX7219 LED DISPLAY MODULES** *(JUN 17)*
8x8 LED matrix module with **DIP** MAX7219 — $5.00
8x8 LED matrix module with **SMD** MAX7219 — $5.00
8-digit 7-segment red display module with **SMD** MAX7219 — $7.50

**MICROBRIDGE** *(MAY 17)*
PCB plus all on-board parts including programmed microcontroller (SMD ceramics for 10µF) — $20.00

**MICROMITE LCD BACKPACK V2 – COMPLETE KIT** *(MAY 17)*
includes PCB, programmed micro, touchscreen LCD, laser-cut UB3 lid, mounting hardware, SMD Mosfets for PWM backlight control and all other on-board parts — $70.00

**EFUSE** *(APR 17)*
two NIS5512 ICs plus one SUP53P06 — $22.50

**DDS MODULES** *(APR 17)*
AD9833 DDS module (with gain control) (for Micromite DDS) — $25.00
AD9833 DDS module (no gain control) (El Cheapo Modules, Part 6) — $15.00

**POOL LAP COUNTER** *(MAR 17)*
two 70mm 7-segment high brightness blue displays plus logic-level Mosfet — $17.50
laser-cut blue tinted lid, 152 x 90 x 3mm — $7.50

**STATIONMASTER** *(MAR 17)*
DRV8871 IC, SMD 1µF capacitor and 100kW potentiometer with detent — $12.50

**ULTRA LOW VOLTAGE LED FLASHER** *(FEB 17)*
kit including PCB and all SMD parts, LDR and blue LED — $12.50

**SC200 AMPLIFIER MODULE** *(JAN 17)* — $35.00
hard-to-get parts: Q8-Q16, D2-D4, 150pF/250V capacitor and five SMD resistors

**60V 40A DC MOTOR SPEED CONTROLLER** *(JAN 17)* — $35.00
hard-to-get parts: IC2, Q1, Q2 and D1

**COMPUTER INTERFACE MODULES** *(JAN 17)*
CP2102 USB-UART bridge — $5.00
microSD card adaptor — $2.50

**TOUCHSCREEN VOLTAGE/CURRENT REFERENCE** *(DEC 16)*
MICROMITE LCD BACKPACK KIT (programmed to suit) PLUS UB1 Lid — $70.00
LASER-CUT MATTE BLACK LID (to suit UB1 Jiffy Box) — $10.00
SHORT FORM KIT with main PCB plus onboard parts (not including BackPack module, jiffy box, power supply or wires/cables) — $99.00

**PASSIVE LINE TO PHONO INPUT CONVERTER** - ALL SMD PARTS *(NOV 16)* — $5.00

**MICROMITE PLUS EXPLORE 100** ***COMPLETE KIT (no LCD panel)*** *(SEP 16)* — $69.90
(includes PCB, programmed micro and the hard-to-get bits including female headers, USB and microSD sockets, crystal, etc but does not include the LCD panel)

**100dB STEREO AUDIO LEVEL/VU METER**
All SMD parts except programmed micro and LEDs (both available separately) *(JUN 16)* — $20.00

**THESE ARE ONLY THE MOST RECENT MICROS AND SPECIALISED COMPONENTS. FOR THE FULL LIST, SEE www.siliconchip.com.au/shop**

*All items subect to availability. Prices valid for month of magazine issue only. All prices in Australian dollars and included GST where applicable. **# P&P prices are within Australia. O'seas? Please email for a quote**

09/17

# PRINTED CIRCUIT BOARDS

**NOTE: The listings below are for the PCB only – *not a full kit*. If you want a kit, contact the kit suppliers advertising in this issue. For more unusual projects where kits are not available, some have specialised components available – see the list opposite.**

**NOTE: Not all PCBs are shown here due to space limits but the SILICON CHIP ONLINESHOP has boards going back to 2001 and beyond. For a complete list of available PCBs, back issues, etc, go to *siliconchip.com.au/shop* Prices are PCBs only, NOT COMPLETE KITS!**

| PRINTED CIRCUIT BOARD TO SUIT PROJECT: | PUBLISHED: | PCB CODE: | Price: |
|---|---|---|---|
| DCC REVERSE LOOP CONTROLLER | OCT 2012 | 09110121 | $10.00 |
| CLASSIC-D CLASS D AMPLIFIER MODULE | NOV 2012 | 01108121 | $30.00 |
| CLASSIC-D 2 CHANNEL SPEAKER PROTECTOR | NOV 2012 | 01108122 | $10.00 |
| HIGH ENERGY ELECTRONIC IGNITION SYSTEM | DEC 2012 | 05110121 | $10.00 |
| 1.5kW INDUCTION MOTOR SPEED CONTROLLER (NEW V2 PCB) | DEC 2012 | 10105122 | $35.00 |
| THE CHAMPION PREAMP and 7W AUDIO AMP (one PCB) | JAN 2013 | 01109121/2 | $10.00 |
| GARBAGE/RECYCLING BIN REMINDER | JAN 2013 | 19111121 | $10.00 |
| 2.5GHz DIGITAL FREQUENCY METER – MAIN BOARD | JAN 2013 | 04111121 | $35.00 |
| 2.5GHz DIGITAL FREQUENCY METER – DISPLAY BOARD | JAN 2013 | 04111122 | $15.00 |
| 2.5GHz DIGITAL FREQUENCY METER – FRONT PANEL | JAN 2013 | 04111123 | $45.00 |
| SEISMOGRAPH MK2 | FEB 2013 | 21102131 | $20.00 |
| MOBILE PHONE RING EXTENDER | FEB 2013 | 12110121 | $10.00 |
| GPS 1PPS TIMEBASE | FEB 2013 | 04103131 | $10.00 |
| LED TORCH DRIVER | MAR 2013 | 16102131 | $5.00 |
| CLASSiC DAC MAIN PCB | APR 2013 | 01102131 | $40.00 |
| CLASSiC DAC FRONT & REAR PANEL PCBs | APR 2013 | 01102132/3 | $30.00 |
| GPS USB TIMEBASE | APR 2013 | 04104131 | $15.00 |
| LED LADYBIRD | APR 2013 | 08103131 | $5.00 |
| CLASSiC-D 12V to ±35V DC/DC CONVERTER | MAY 2013 | 11104131 | $15.00 |
| DO NOT DISTURB | MAY 2013 | 12104131 | $10.00 |
| LF/HF UP-CONVERTER | JUN 2013 | 07106131 | $10.00 |
| 10-CHANNEL REMOTE CONTROL RECEIVER | JUN 2013 | 15106131 | $15.00 |
| IR-TO-455MHZ UHF TRANSCEIVER | JUN 2013 | 15106132 | $7.50 |
| "LUMP IN COAX" PORTABLE MIXER | JUN 2013 | 01106131 | $15.00 |
| L'IL PULSER MKII TRAIN CONTROLLER | JULY 2013 | 09107131 | $15.00 |
| L'IL PULSER MKII FRONT & REAR PANELS | JULY 2013 | 09107132/3 | $20.00/set |
| REVISED 10 CHANNEL REMOTE CONTROL RECEIVER | JULY 2013 | 15106133 | $15.00 |
| INFRARED TO UHF CONVERTER | JULY 2013 | 15107131 | $5.00 |
| UHF TO INFRARED CONVERTER | JULY 2013 | 15107132 | $10.00 |
| IPOD CHARGER | AUG 2013 | 14108131 | $5.00 |
| PC BIRDIES | AUG 2013 | 08104131 | $10.00 |
| RF DETECTOR PROBE FOR DMMs | AUG 2013 | 04107131 | $10.00 |
| BATTERY LIFESAVER | SEPT 2013 | 11108131 | $5.00 |
| SPEEDO CORRECTOR | SEPT 2013 | 05109131 | $10.00 |
| SiDRADIO (INTEGRATED SDR) Main PCB | OCT 2013 | 06109131 | $35.00 |
| SiDRADIO (INTEGRATED SDR) Front & Rear Panels | OCT 2013 | 06109132/3 | $25.00/pr |
| TINY TIM AMPLIFIER (same PCB as Headphone Amp [Sept11]) | OCT 2013 | 01309111 | $20.00 |
| AUTO CAR HEADLIGHT CONTROLLER | OCT 2013 | 03111131 | $10.00 |
| GPS TRACKER | NOV 2013 | 05112131 | $15.00 |
| STEREO AUDIO DELAY/DSP | NOV 2013 | 01110131 | $15.00 |
| BELLBIRD | DEC 2013 | 08112131 | $10.00 |
| PORTAPAL-D MAIN BOARDS | DEC 2013 | 01111131-3 | $35.00/set |
| (for CLASSiC-D Amp board and CLASSiC-D DC/DC Converter board refer above [Nov 2012/May 2013]) | | | |
| LED Party Strobe (also suits Hot Wire Cutter [Dec 2010]) | JAN 2014 | 16101141 | $7.50 |
| Bass Extender Mk2 | JAN 2014 | 01112131 | $15.00 |
| Li'l Pulser Mk2 Revised | JAN 2014 | 09107134 | $15.00 |
| 10A 230VAC MOTOR SPEED CONTROLLER | FEB 2014 | 10102141 | $12.50 |
| NICAD/NIMH BURP CHARGER | MAR 2014 | 14103141 | $15.00 |
| RUBIDIUM FREQ. STANDARD BREAKOUT BOARD | APR 2014 | 04105141 | $10.00 |
| USB/RS232C ADAPTOR | APR 2014 | 07103141 | $5.00 |
| MAINS FAN SPEED CONTROLLER | MAY 2014 | 10104141 | $10.00 |
| RGB LED STRIP DRIVER | MAY 2014 | 16105141 | $10.00 |
| HYBRID BENCH SUPPLY | MAY 2014 | 18104141 | $20.00 |
| 2-WAY PASSIVE LOUDSPEAKER CROSSOVER | JUN 2014 | 01205141 | $20.00 |
| TOUCHSCREEN AUDIO RECORDER | JUL 2014 | 01105141 | $12.50 |
| THRESHOLD VOLTAGE SWITCH | JUL 2014 | 99106141 | $10.00 |
| MICROMITE ASCII VIDEO TERMINAL | JUL 2014 | 24107141 | $7.50 |
| FREQUENCY COUNTER ADD-ON | JUL 2014 | 04105141a/b | $15.00 |
| TEMPMASTER MK3 | AUG 2014 | 21108141 | $15.00 |
| 44-PIN MICROMITE | AUG 2014 | 24108141 | $5.00 |
| OPTO-THEREMIN MAIN BOARD | SEP 2014 | 23108141 | $15.00 |
| OPTO-THEREMIN PROXIMITY SENSOR BOARD | SEP 2014 | 23108142 | $5.00 |
| ACTIVE DIFFERENTIAL PROBE BOARDS | SEP 2014 | 04107141/2 | $10/SET |
| MINI-D AMPLIFIER | SEP 2014 | 01110141 | $5.00 |
| COURTESY LIGHT DELAY | OCT 2014 | 05109141 | $7.50 |
| DIRECT INJECTION (D-I) BOX | OCT 2014 | 23109141 | $5.00 |
| DIGITAL EFFECTS UNIT | OCT 2014 | 01110131 | $15.00 |
| DUAL PHANTOM POWER SUPPLY | NOV 2014 | 18112141 | $10.00 |
| REMOTE MAINS TIMER | NOV 2014 | 19112141 | $10.00 |
| REMOTE MAINS TIMER PANEL/LID (BLUE) | NOV 2014 | 19112142 | $15.00 |
| ONE-CHIP AMPLIFIER | NOV 2014 | 01109141 | $5.00 |
| TDR DONGLE | DEC 2014 | 04112141 | $5.00 |
| MULTISPARK CDI FOR PERFORMANCE VEHICLES | DEC 2014 | 05112141 | $10.00 |
| CURRAWONG STEREO VALVE AMPLIFIER MAIN BOARD | DEC 2014 | 01111141 | $50.00 |
| CURRAWONG REMOTE CONTROL BOARD | DEC 2014 | 01111144 | $5.00 |
| CURRAWONG FRONT & REAR PANELS | DEC 2014 | 01111142/3 | $30/set |
| CURRAWONG CLEAR ACRYLIC COVER | JAN 2015 | - | $25.00 |
| ISOLATED HIGH VOLTAGE PROBE | JAN 2015 | 04108141 | $10.00 |
| SPARK ENERGY METER MAIN BOARD | FEB/MAR 2015 | 05101151 | $10.00 |
| SPARK ENERGY ZENER BOARD | FEB/MAR 2015 | 05101152 | $10.00 |
| SPARK ENERGY METER CALIBRATOR BOARD | FEB/MAR 2015 | 05101153 | $5.00 |
| APPLIANCE INSULATION TESTER | APR 2015 | 04103151 | $10.00 |
| APPLIANCE INSULATION TESTER FRONT PANEL | APR 2015 | 04103152 | $10.00 |
| LOW-FREQUENCY DISTORTION ANALYSER | APR 2015 | 04104151 | $5.00 |
| APPLIANCE EARTH LEAKAGE TESTER PCBs (2) | MAY 2015 | 04203151/2 | $15.00 |
| APPLIANCE EARTH LEAKAGE TESTER LID/PANEL | MAY 2015 | 04203153 | $15.00 |
| BALANCED INPUT ATTENUATOR MAIN PCB | MAY 2015 | 04105151 | $15.00 |
| BALANCED INPUT ATTENUATOR FRONT & REAR PANELS | MAY 2015 | 04105152/3 | $20.00 |
| 4-OUTPUT UNIVERSAL ADJUSTABLE REGULATOR | MAY 2015 | 18105151 | $5.00 |
| SIGNAL INJECTOR & TRACER | JUNE 2015 | 04106151 | $7.50 |
| PASSIVE RF PROBE | JUNE 2015 | 04106152 | $2.50 |
| SIGNAL INJECTOR & TRACER SHIELD | JUNE 2015 | 04106153 | $5.00 |
| BAD VIBES INFRASOUND SNOOPER | JUNE 2015 | 04104151 | $5.00 |
| CHAMPION + PRE-CHAMPION | JUNE 2015 | 01109121/2 | $7.50 |
| DRIVEWAY MONITOR TRANSMITTER PCB | JULY 2015 | 15105151 | $10.00 |
| DRIVEWAY MONITOR RECEIVER PCB | JULY 2015 | 15105152 | $5.00 |
| MINI USB SWITCHMODE REGULATOR | JULY 2015 | 18107151 | $2.50 |
| VOLTAGE/RESISTANCE/CURRENT REFERENCE | AUG 2015 | 04108151 | $2.50 |
| LED PARTY STROBE MK2 | AUG 2015 | 16101141 | $7.50 |
| ULTRA-LD MK4 200W AMPLIFIER MODULE | SEP 2015 | 01107151 | $15.00 |
| 9-CHANNEL REMOTE CONTROL RECEIVER | SEP 2015 | 1510815 | $15.00 |
| MINI USB SWITCHMODE REGULATOR MK2 | SEP 2015 | 18107152 | $2.50 |
| 2-WAY PASSIVE LOUDSPEAKER CROSSOVER | OCT 2015 | 01205141 | $20.00 |
| ULTRA LD AMPLIFIER POWER SUPPLY | OCT 2015 | 01109111 | $15.00 |
| ARDUINO USB ELECTROCARDIOGRAPH | OCT 2015 | 07108151 | $7.50 |
| FINGERPRINT SCANNER – SET OF TWO PCBS | NOV 2015 | 03109151/2 | $15.00 |
| LOUDSPEAKER PROTECTOR | NOV 2015 | 01110151 | $10.00 |
| LED CLOCK | DEC 2015 | 19110151 | $15.00 |
| SPEECH TIMER | DEC 2015 | 19111151 | $15.00 |
| TURNTABLE STROBE | DEC 2015 | 04101161 | $5.00 |
| CALIBRATED TURNTABLE STROBOSCOPE ETCHED DISC | DEC 2015 | 04101162 | $10.00 |
| VALVE STEREO PREAMPLIFIER – PCB | JAN 2016 | 01101161 | $15.00 |
| VALVE STEREO PREAMPLIFIER – CASE PARTS | JAN 2016 | 01101162 | $20.00 |
| QUICKBRAKE BRAKE LIGHT SPEEDUP | JAN 2016 | 05102161 | $15.00 |
| SOLAR MPPT CHARGER & LIGHTING CONTROLLER | FEB/MAR 2016 | 16101161 | $15.00 |
| MICROMITE LCD BACKPACK, 2.4-INCH VERSION | FEB/MAR 2016 | 07102121 | $7.50 |
| MICROMITE LCD BACKPACK, 2.8-INCH VERSION | FEB/MAR 2016 | 07102122 | $7.50 |
| BATTERY CELL BALANCER | MAR 2016 | 11111151 | $6.00 |
| DELTA THROTTLE TIMER | MAR 2016 | 05102161 | $15.00 |
| MICROWAVE LEAKAGE DETECTOR | APR 2016 | 04103161 | $5.00 |
| FRIDGE/FREEZER ALARM | APR 2016 | 03104161 | $5.00 |
| ARDUINO MULTIFUNCTION MEASUREMENT | APR 2016 | 04116011/2 | $15.00 |
| PRECISION 50/60HZ TURNTABLE DRIVER | MAY 2016 | 04104161 | $15.00 |
| RASPBERRY PI TEMP SENSOR EXPANSION | MAY 2016 | 24104161 | $5.00 |
| 100DB STEREO AUDIO LEVEL/VU METER | JUN 2016 | 01104161 | $15.00 |
| HOTEL SAFE ALARM | JUN 2016 | 03106161 | $5.00 |
| UNIVERSAL TEMPERATURE ALARM | JULY 2016 | 03105161 | $5.00 |
| BROWNOUT PROTECTOR MK2 | JULY 2016 | 10107161 | $10.00 |
| 8-DIGIT FREQUENCY METER | AUG 2016 | 04105161 | $10.00 |
| APPLIANCE ENERGY METER | AUG 2016 | 04116061 | $15.00 |
| MICROMITE PLUS EXPLORE 64 | AUG 2016 | 07108161 | $5.00 |
| CYCLIC PUMP/MAINS TIMER | SEPT 2016 | 10108161/2 | $10.00/pair |
| MICROMITE PLUS EXPLORE 100 (4 layer) | SEPT 2016 | 07109161 | $20.00 |
| AUTOMOTIVE FAULT DETECTOR | SEPT 2016 | 05109161 | $10.00 |
| MOSQUITO LURE | OCT 2016 | 25110161 | $5.00 |
| MICROPOWER LED FLASHER | OCT 2016 | 16109161 | $5.00 |
| MINI MICROPOWER LED FLASHER | OCT 2016 | 16109162 | $2.50 |
| 50A BATTERY CHARGER CONTROLLER | NOV 2016 | 11111161 | $10.00 |
| PASSIVE LINE TO PHONO INPUT CONVERTER | NOV 2016 | 01111161 | $5.00 |
| MICROMITE PLUS LCD BACKPACK | NOV 2016 | 07110161 | $7.50 |
| AUTOMOTIVE SENSOR MODIFIER | DEC 2016 | 05111161 | $10.00 |
| TOUCHSCREEN VOLTAGE/CURRENT REFERENCE | DEC 2016 | 04110161 | $12.50 |
| SC200 AMPLIFIER MODULE | JAN 2017 | 01108161 | $10.00 |
| 60V 40A DC MOTOR SPEED CON. CONTROL BOARD | JAN 2017 | 11112161 | $10.00 |
| 60V 40A DC MOTOR SPEED CON. MOSFET BOARD | JAN 2017 | 11112162 | $12.50 |
| GPS SYNCHRONISED ANALOG CLOCK | FEB 2017 | 04202171 | $10.00 |
| ULTRA LOW VOLTAGE LED FLASHER | FEB 2017 | 16110161 | $2.50 |
| POOL LAP COUNTER | MAR 2017 | 19102171 | $15.00 |
| STATIONMASTER TRAIN CONTROLLER | MAR 2017 | 09103171/2 | $15.00/set |
| EFUSE | APR 2017 | 04102171 | $7.50 |
| SPRING REVERB | APR 2017 | 01104171 | $12.50 |
| 6GHZ+ 1000:1 PRESCALER | MAY 2017 | 04112162 | $7.50 |
| MICROBRIDGE | MAY 2017 | 24104171 | $2.50 |
| MICROMITE LCD BACKPACK V2 | MAY 2017 | 07104171 | $7.50 |
| 10-OCTAVE STEREO GRAPHIC EQUALISER PCB | JUN 2017 | 01105171 | $12.50 |
| 10-OCTAVE STEREO GRAPHIC EQUALISER FRONT PANEL | JUN 2017 | 01105172 | $15.00 |
| 10-OCTAVE STEREO GRAPHIC EQUALISER CASE PIECES | JUN 2017 | | $15.00 |
| RAPIDBRAKE | JUL 2017 | 05105171 | $10.00 |
| DELUXE EFUSE | AUG 2017 | 18106171 | $15.00 |
| DELUXE EFUSE UB1 LID | AUG 2017 | SC4316 | $5.00 |
| MAINS SUPPLY FOR BATTERY VALVES (INC. PANELS) | AUG 2017 | 18108171-4 | $25.00 |
| **NEW THIS MONTH** | | | |
| 3-WAY ADJUSTABLE ACTIVE CROSSOVER | SEPT 2017 | 01108171 | $20.00 |
| 3-WAY ADJUSTABLE ACTIVE CROSSOVER PANELS | SEPT 2017 | 01108172/3 | $20.00/pair |

***LOOKING FOR TECHNICAL BOOKS? YOU'LL FIND THE COMPLETE LISTING OF ALL BOOKS AVAILABLE IN THE SILKS & DVDs" PAGES AT SILICONCHIP.COM.AU/SHOP***

# PRODUCT SHOWCASE

## Freeview Plus TV upgrade

Freeview Australia, a consortium of free-to-air TV stations, has delivered the new Freeview Plus service to more than 2.2 million Freeview Plus-enabled TVs across Australia.

Freeview Plus is designed to make content discovery easier than ever before, offering a simplified user experience, additional features and a fresh look and feel.

Freeview Plus is a hybrid digital television service that provides access to catch-up free-to-air programming on TVs and led the world when it launched in 2014, winning local and international accolades for its ground-breaking technology and user interface.

There are currently around 2.2 million TV receivers in Australia that are Freeview Plus-enabled with an 85% connection rate.

Key to the upgrade has been the implementation of world's best practice interface design which now features image-based browsing and the introduction of the My TV function.

My TV presents the viewer with image-based carousels including personalised recommendations and viewers' favourites along with live TV, catch up and genre-based browsing.

Other Freeview Plus upgrade features include an easy-to-use guide with backwards navigation to catch-up content and a simplified Mini Guide for quick program discovery.

For more information, visit www.freeview.com.au or view the how-to video at siliconchip.com.au/l/aaem

## New record for LONGi 60-cell Solar Module: 325.6W

LONGi Solar received a test report showing its latest 60 cell Hi-MO1 module achieved a power output of 325.6W under standard testing conditions (STC) with the conversion efficiency reaching 19.91%.

The module incorporates monocrystalline PERC cells based on mass production technology with a 21.9% conversion efficiency. The test was completed at the TUV Rheinland Shanghai Lab with the open-circuit voltage and short-circuit current reaching 40.79V and 10.160A respectively.

Contact:
**LERRI Solar Technology Co Ltd**
201, Building 8 Sandhill Plaza, Lane 2290, Zuchongzhi Rd, Pudong, Shanghai, China
Tel: (0011) 86 021 6104 7322
**Website:** http://en.longi-solar.com

## Rail-to-rail op amp with inbuilt EMI protection

EMI – electro-magnetic interference – is the bane of engineers and circuit designers everywhere.

Among a host of problems, EMI causes DC errors, increased current consumption and unwanted tones.

Now Microchip have introduced the MCP6411, a single, general purpose op amp offering integrated EMI protection and rail-to-rail input/output over the 1.7 to 5.5V operating range. This amplifier has a typical GBWP of 1 MHz, with typical quiescent current of 50µA. The MCP6411 is available in SC-70 and SOT-23 packages.

Integrated EMI protection, when used with proper circuit/PCB design techniques, eliminates external components that increase system cost, design complexity and footprint.

Many applications could benefit from integrated EMI protection, including medical instrumentation, automotive electronics, data acquisition equipment, battery powered portable systems, sensor amplification and conditioning and analog active filters.

You can find the MCP6411 data sheet at siliconchip.com.au/l/aael

Contact:
**Microchip Technology Inc**
Unit 32, 41 Rawson St, Epping NSW 2121
**Tel:** (02)9868 6733 Fax: (02) 9868 6755
**Website:** www.microchipdirect.com

## Smartphone Temperature Datalogger

The new TagTemp-S, from Novus Automation, is a cost-effective data logger recommended for use in warehouse and transportation applications.

It is an IP65 rated sealed unit with a temperature range of -30 to 60°C and can operate for 2 years at a 5-minute acquisition interval. It can store up to 4020 readings.

The stored data is transferred through a smartphone equipped with an embedded NFC interface or by an NFC interface connected to a computer through a USB port (both not included).

The LogChart-NFC smartphone app allows the user to configure the logger and view and graph the temperature history. The NOVUS Cloud Portal is offered as an optional service to TagTemp-NFC users.

The LogChart-NFC Android app can be configured to send out temperature recordings read from TagTemp-NFC devices straight to the internet portal. Once stored on NOVUS Cloud, records can be checked from any internet browser.

Prices start at $59.00 +GST each.

Contact:
**Ocean Controls**
PO Box 2191, Seaford BC, VIC 3198
**Tel:** (03) 9782 5882 **Fax:** (03) 9782 5517
**Website:** www.oceancontrols.com.au

# ASK SILICON CHIP

**Got a technical problem? Can't understand a piece of jargon or some technical principle? Drop us a line and we'll answer your question. Send your email to silicon@siliconchip.com.au**

## Designing and winding toroidal inductors

My question is regarding a project in the March 2004 edition of SILICON CHIP titled "3V to 9V DC/DC Converter" (www.siliconchip.com.au/Article/3421). I understand how boost converters work and what the coil (inductor) does. What I want to know is how calculate the inductance value of the coil.

In the "Winding the Inductor" section, the article states: "The inductor is hand-wound on a 14.8mm powdered iron toroid. You'll need about 700mm of 0.63mm enamelled copper wire for the job. In total, 30 turns are required to achieve the 47µH inductance value."

In this project, the toroidal core was powdered iron with the dimensions 15mm x 8mm x 6.5mm and the wire is enamelled copper of 0.63mm diameter, with 30 turns. How did you calculate that this would give 47µH? What difference would a ferrite core make? I hope you can help me because I want to be able to design my own boost and buck converters. (J. D., via email)

● Each core has an "Al" value; for the 15 x 8 x 6.5mm compressed powdered-iron core, it depends on the exact type used. For a Neosid type number 17-732-22, the Al value given is 47 whereas for the Jaycar LO-1242 it is 34.

To determine the number of turns of wire around the core required for a given inductance value, you divide the Al value into the inductance required in mH, then take the square root and multiply by 1000. Note that 47µH is equal to 0.047mH.

So for the Neosid core, you can calculate the number of turns as $1000 \times \sqrt{0.047\text{mH} \div \text{Al}} = 32$. For the Jaycar LO-1242 it is 37.

Each core also has a Joule rating while allows you to calculate the saturation current. In the case of the Neosid core, the rating is is 0.54mJ. The peak current at which saturation occurs is the square root of the Joule rating, divided by the inductance in millihenries (mH); $\sqrt{0.54 \div 0.047} = 3.39$ so that inductor could handle 3.39A peak before saturation.

Note that saturation is progressive; by the time the current had reached 3.39A, the effective inductance would already be lower and it would drop rapidly as the current increased.

The required wire diameter is usually based on 5A/mm$^2$. The 0.63mm diameter wire has a cross sectional area ($\pi r^2$) of 0.312mm$^2$ and so is suited for up to 1.55A RMS.

You can find more information on these formulas at the Neosid website: www.neosid.com.au/tech-info.html

Note that ferrite cores have a much higher permeability (and higher Al) and therefore saturate at lower currents. They also tend to have significantly lower eddy current losses, so ferrite inductors are normally larger

## Alternative Majestic/Senator tweeter with titanium diaphragm

I was wondering whether you considered the Celestion CDX1-1720 compression driver (titanium diaphragm) for the Majestic speaker system before settling on the CDX1-1730 (PETP diaphragm), and if so, why you chose the 1730 over the 1720.

The 1720 has a wider frequency range (perhaps a little too wide to be used for the available horns) and is available at a similar price.

I have purchased the Celestion No-bell horns and want a compression driver to use with them, but I am not using them in a Majestic design. I am trying to decide which driver to buy, CDX1-1720 or CDX1-1730, hence my question.

Any information you can give regarding why you chose the CDX1-1730 would not only be very interesting in itself, but might also help me make a decision which one to go for. Many thanks. (P. T., Casula, NSW)

● Allan Linton-Smith replies: According to the official Celestion brochure (websites can differ), the CDX1-1730 handles more power (75W RMS, AES standard as opposed to 50W RMS for the 1720). The CDX1-1730 is also more efficient, at 110dB/W @ 1m, as opposed to the 1720 at 107dB/W @ 1m.

The CDX1-1730 seems to have a flatter response on paper but there is not much in it. The CDX1-1720 can tolerate slightly lower frequencies. All we know is that the CDX1-1730 together with the "No-bell" horn is well regarded by everyone at SILICON CHIP and has been our tweeter of choice for three projects.

For the Majestic, we were aiming for 300W maximum power handling and the CDX1-1730 was a better choice because we could attenuate it more heavily, so it could be virtually bullet-proof against big power transients.

Nevertheless, the CDX1-1720 may be a good alternative for most systems which don't require huge power handling. We haven't tried the 1720 but it should be OK matched up to the No-bell horn. Perhaps price will determine your choice!

In the opinion of SILICON CHIP staff, tweeters with metallic diaphragms can sound overly bright. On the other hand, Mackie advocate metallic tweeters as they do not "break up" as badly as other types.

The CDX1-1720 could be used in our designs but the extra capacitor we put in the crossover to boost the high frequencies often may not be needed. It may be necessary to do some re-balancing of the crossover components to avoid an overall shrill sound.

but more efficient than those with powdered iron cores.

The design process requires careful selection of the core size and material based on current, core saturation, inductance and switching frequency.

## Solar Lighting System LDR threshold control

I have just completed the Solar Powered Lighting System project from the May and June 2010 issues (www.siliconchip.com.au/Series/9).

While it works well, I need more control over the LDR threshold. The normal ambient light level at that location at night is not quite low enough to turn the system on. Can I change the value of the 100kΩ resistor in series with the 500kΩ trimpot to remedy this? (N. S., Bongaree, Qld)

● The 500kΩ trimpot (VR5) and series 100kΩ resistor should provide more than enough adjustment range if the LDR is to specification. You could use a 10kΩ resistor instead of the 100kΩ resistor that is in series with VR5, if the voltage across the LDR does not rise above 2.5V in low light conditions.

## Ultrasonic Anti-fouling Mk.1 blowing fuse

I purchased an Ultrasonic Anti-fouling Kit from Jaycar, catalog code KC5498, based on your project from the September and November 2010 issues (www.siliconchip.com.au/Series/12).

I have assembled the kit and the fuse keeps blowing whenever I try to power it up. I have learnt that other people have had the same problem. I have contacted Jaycar for advice on how to rectify the problem and they have told me to contact you. (T. T., Whale Beach, NSW)

● Although some other constructors have had similar problems where the fuse blows, this has been due to a range of causes rather than any one cause. Assuming you have only used the parts as supplied in the kit, try these following steps.

Firstly, make sure the electrolytic capacitors are oriented with the correct polarity. Secondly, check the soldering for dry joints and for shorts between adjacent component connections. Also check for correct placement of all components.

Adjust VR1 for 5V between TP1 and TP0 before inserting the fuse and IC2. Make sure IC2 is inserted with the correct polarity.

If you are sure the kit is constructed correctly, a slow blow 3A fuse could be used. This may prevent the fuse blowing should the large 4700µF electrolytic capacitor require a higher than normal charging current when first powered up.

## Trouble-shooting failed Ultrasonic Anti-fouling

I purchased the Jaycar Ultrasonic Anti-fouling kit (KC5498), based on the project in the September and November 2010 issues, for my 31-foot yacht (www.siliconchip.com.au/Series/12). I'm an electrical engineer so the assembly was straightforward. It had been working on my yacht but yesterday while out sailing, the fuse blew. When I replaced the fuse, the LED did not come on to signify the unit is working. I checked the voltage both sides of the replacement fuse and got 12V DC.

Are there other checks I can perform on the unit with my multimeter? While it was working, I was very impressed with the unit. (I. W., Ireland)

● Perhaps there is an open-circuit connection to the PCB for the fuse clip on the output side. This might explain why the LED does not light.

Check that the supply at TP1 is at 5V. Check pin 1 and pin 4 of IC2 are at 5V and that pin 8 is at 0V. Also there should be a DC voltage reading at the gate of each Mosfet as they are driven by IC2.

The voltage would be around 2V but this may vary. If voltage is 0V or floating (ie, can be pulled up to 5V with a 100kΩ resistor to the 5V supply), then there is a problem with IC2.

Other than that, there may be an open-circuit connection on the transformer primary windings or Q1 and Q2 may have failed and are not conducting when the gate is driven high (to 5V).

Check continuity of the 12V supply after the fuse up to the transformer terminals on the PCB. 12V should also be present at the drains of Mosfets Q1 and Q2.

Check that the 20MHz crystal is oscillating. A voltage reading should be found at pin 3 of IC2 at about 2-3VDC when checked with a multimeter.

## Using Battery Lifesaver with 7-cell Li-ion battery

I have an application for the Battery Lifesaver (September 2013; www.siliconchip.com.au/Article/4360) which uses a "7S" LiPo battery, ie, 29.4V fully charged, 25.9V nominal and 21-25.2V discharged.

Since the battery voltage is pretty much at the upper limit of the Mosfet maximum drain-source rating, do you

## Arduino-based 230VAC speed controller wanted

I purchased Jaycar's KC5478 kit for the 230VAC 10A Full-Wave Motor Speed Controller published in your May 2009 issue (see: www.siliconchip.com.au/Article/1434).

I bought this with plans to interface the kit with an Arduino microcontroller to vary the motor speed. However, upon opening the kit, I read in the instructions that the whole circuit "floats at 230VAC".

Is it possible to interface the kit with an Arduino? Please advise if you can suggest a mains motor speed controller that can be used with a microcontroller adjusting the reference speed. (T. K., via email)

● That speed controller project is now obsolete, having been superseded by our improved design in the February & March 2014 issues. See: www.siliconchip.com.au/Series/195

However, neither project has provision for interfacing to an external microcontroller, Arduino or otherwise.

That would require something like optical isolation to render it safe. The improved 2014 design does use a PIC16F88 micro, programmed in assembly language.

To make it compatible with Arduino or the Micromite, it would need an extensive re-design.

If we do publish another speed controller with similar specifications, we would certainly make it compatible with Maximite, Micromite and probably Arduino.

## Induction Motor Speed Controller troubleshooting

I emailed you about six months ago while I was trying to sort out an initial problem with the 1.5kW Induction Motor Speed Controller (April & May 2012; www.siliconchip.com.au/Series/25). I've lost those emails due to a software problem but continue my quest to get this equipment operational.

To recap, I was not getting the PIC program to run when 3.3V power was applied. I had no LED activity and no signal was present at pin 15 of the PIC.

There was, however, a hint of activity on the PIC outputs to the optocouplers.

I obtained a new unprogrammed PIC, a PICkit 3 and Microchip programming software and went through the learning process until I had my PIC programmed with the relevant HEX file from the SILICON CHIP website. But alas, still no proper operation.

I then breadboarded the PIC and its surrounding circuitry and had some success. The Start LED flashes for a while in pool pump mode and the frequency of the waveform at pin 15 changes as expected.

The only thing possibly amiss at this stage is that there are drive signals to the optocouplers at pins 22, 24 and 26 but pin 25 is constantly low. Is this normal or should there also be activity at pin 25? Once I get past this hurdle, I'll be able to try and sort out what is wrong on the main PCB.

The only things different on my breadboard are a leaded tantalum capacitor at pin 20 (instead of an unreadable surface mount capacitor on the main PCB) and I've used a 10kΩ resistor at pin 1 (MCLR) as per the PIC datasheet instead of 47kΩ as specified in the article. (M. H., Moonee Beach, NSW)

● We have all your previous emails and our replies. Pin 25 only goes high to shut down the outputs of the device if a fault is detected so the constant low voltage is normal.

M. H., subsequently got back to us, having solved the issue: "Up until the other day I had been following the testing instructions which said to feed 3.3V into the circuit via CON4."

"I had tried this with a couple of different linear power supplies with the same result."

"By chance, I decided to check the operation of the onboard 3.3V regulator by feeding about 7V to REG1."

"Lo and behold, the PIC sprang into life and worked as it should. I then removed the 7V supply and fed 3.3V into pin 2 of the ICSP connector instead. Once again, it worked properly. So the problem is the 10Ω resistor between pin 1 of CON4 and the $V_{DD}$ pin (pin 13) of IC3."

"Also, during my extensive checks of voltages and continuity before sorting out the problem, I found that the connections shown in the circuit diagram between pins 17 and 18 and the DIP switches labelled 'EXT' and 'O/S' are transposed. My PCB is the updated version (supplied in a Jaycar kit)."

M. H., is correct, the instructions to feed 3.3V into CON4 are erroneous since the voltage drop across the 10Ω series resistor could be high enough to prevent proper operation and will result in an unregulated supply for IC1.

During testing, 3.3V power should be fed in via the ICSP header instead. We will publish errata on this, and the incorrect labelling of the DIP switches in the circuit diagram.

have any recommendations as to the suitability of the Battery Saver to cope as published; ie, should I upgrade any of the components?

Inrush current is about 20A and normal current drain is around 6A. Thank you for any advice. (J. R. N., Widgee, Qld)

● The original LifeSaver design should be OK in this application. Li-ion charger cut-off is usually very accurate so it's unlikely the battery voltage will ever exceed 30V and Mosfet drain/source ratings are usually at least several volts below the actual avalanche breakdown voltage.

If you wanted to, you could substitute a 40V Mosfet but it would need to be a similar type with a very low on-resistance. We don't think that is necessary.

## Rechargeable valve radio battery supply wanted

The "Battery Valve Radio Power Supply" in the August 2017 issue (www.siliconchip.com.au/Article/10751) is good but what if you really want to run on battery as the original device was intended rather than mains?

How about a design that is battery powered (eg, Li-ion/NiMH?) and gives the same output voltages of 1.5V and 90V? I have a set that used a large 1.5V bell battery for the filaments and two 45V dry batteries in series for the plate voltage. 45V batteries are very expensive. (R. P., Auckland, NZ)

● It could be done but we would need a switchmode booster circuit to go from 11.4V (standard three-cell lithium-ion battery) to 90V and probably a second switchmode (buck) circuit to provide the 1.5A output.

It would need quite a lot of EMI suppression to avoid causing interference with the radio.

## Upgrading an ETI 480 amplifier

Back in February 1977, I built the ETI 50W stereo amplifier which used two of the ETI 480 amplifier modules along with preamp and tone control boards.

It still works fine and I am looking to revamp the unit to use as a stereo fold-back amp at a local hall.

I am thinking of adding the extra transistors to the power amplifier modules to convert them into the 100W versions as well as removing the preamp and tone boards and adding a LED VU meter and speaker protection modules.

However, the original 28V-0-28V transformers are no longer available; this is the same one that was used for your SC480 design from January & February 2003 (www.siliconchip.com.au/Series/109).

Altronics have a 300VA 30V-0-30V toroidal transformer with 12V and 15V auxiliary windings. I could use the auxiliary windings to run cooling fans as the area the unit works in gets warm.

But will the 100W version of the ETI 480 (or your SC480) handle the higher

## Touchscreen DDS Signal Generator signal clips at 100%

I have built the Touchscreen DDS Signal Generator as described on page 68 of the April 2017 issue of SILICON CHIP (www.siliconchip.com.au/Article/10616).

I purchased nearly all of the components from the SILICON CHIP Online Shop. The construction was straightforward and the initial testing went well.

However, I noticed that the sinewave output would start to be clipped on the positive cycle once the level was raised above 90%. The amount of signal clipping increased as the level approached the 100% value.

I checked it on two different oscilloscopes just to make sure there was not some obscure problem on the first oscilloscope used. The second oscilloscope that was used happened to be the Banggood DSO138 LCD Scope, as described on page 53 of the April 2017 issue of SILICON CHIP. Both oscilloscopes show the signal clipping of the sinewave above the 90% level.

It also appears that the square wave produced by the Touchscreen DDS Signal Generator is over-driven because both oscilloscopes show the horizontal line portion of the positive and negative cycle on a slope instead of being horizontal.

Unfortunately, the square wave level is fixed at 100% so it cannot be decreased making it impossible to check if the square wave looks correct at a lower level setting.

There does not appear to be any way of eliminating these two problems by adjustment. It is worth noting that the triangle waveform is perfect even at the 100% level setting.

Has this problem been encountered by anyone else and is there a solution? (D. B., Wellington, New Zealand)

● We asked Geoff Graham to comment and his response is as follows.

The output waveform is clipping because the gain of the amplifier in the module is too high and the output is being limited by the power supply voltage. We tested a number of modules and set the maximum gain based on these tests but you may have a module with even more gain or perhaps a lower power supply voltage.

In the BASIC program (SigGenerator.bas), the gain is set at line number 495 ("Local Integer x = (Level/100) * 211"). You can adjust the number 211 to suit your module. Try a lower value (say 190) and adjust it as necessary so that you do not get clipping at the maximum output.

To edit the BASIC program, you will need to connect a USB/Serial converter to the console, stop the program using CTRL-C and run the EDIT command. See the Micromite User Manual for details.

The sloping top and bottom of the square wave output is probably because you are using AC coupling on your oscilloscope's input.

The Touchscreen DDS Signal Generator's output is also AC coupled, however, the large value used for the output capacitor will ensure that this effect is only seen at low frequencies. It would be worth checking that the value of this capacitor is correct (470µF).

voltage? I realise I have to change to something like a 35A bridge rectifier and increase the filter caps to say, a total of 10000µF.

We don't intend on running the amplifier flat-chat as so many people seem to think is a requirement for running power amps in an audio or PA system. (A. B., Davoren Park, SA)

● A 30V-0-30V transformer is probably just a little too high and not worth the risk of blowing output transistors. In any case, both the ETI480 and the SC480 are obsolete.

Why not build our recently described SC200? It is much more rugged, with far more power output, easy to build and it will run with a 30V or 40V per side transformer.

## Li'l Pulser overload buzzer only beeps

I have built the Li'l Pulser Mk2 model railway controller (from the July 2013 issue, updated in the January 2014 issue; www.siliconchip.com.au/Series/178) and it appears to work OK.

But if I short-circuit the track, all I get is one short beep from the siren instead of a continuous sound. Is that correct? (R. H., Campbelltown, NSW)

● Yes, the overload buzzer should sound briefly. That's because when a short is detected, the buzzer sounds and supply to the track is switched off.

With supply off, the overload is removed and so the buzzer goes off. The supply is restored after a short period and the buzzer sounds again if an overload is still present.

## Automatic Audio Gain Control circuit wanted

I am after a copy of a SILICON CHIP magazine that contains the circuit and building instructions for an Audio Automatic Gain Control unit. I need to connect it to the speaker or line output of a QRP transceiver. Can you please help me? (E. T., Hornsby Heights, NSW)

● We published an Automatic Level (Volume) Control in the March 1996 issue and Compressors (which operate similarly) in the March 1999, June 2000 and January 2012 issues. See the links below.

The Compressors boost low levels and reduce high levels for a more constant sound level but with some degree of volume variation. The Automatic Level Control maintains a constant volume. The settings can be changed to suit your purposes.

The Automatic Level Control from March 1996 is available as a printed back issue while the others can be viewed online or a printed back-issue purchased.

We suggest you build the January 2012 design as it's the most up-to-date with two kits available (Jaycar KC5507 and Altronics K5526) and we can also supply the PCB and panels from our Online Shop.

- January 2012 "A Stereo Audio Compressor" www.siliconchip.com.au/Article/809
- June 2000, "CD Compressor for Cars or the Home" www.siliconchip.com.au/Article/4328
- March 1999, "Easy-to-Build Audio Compressor" www.siliconchip.com.au/Article/4608

SC

# MARKET CENTRE

Cash in your surplus gear. Advertise it here in SILICON CHIP

## KIT ASSEMBLY & REPAIR

**KEITH RIPPON KIT ASSEMBLY & REPAIR:**
* Australia & New Zealand;
* Small production runs.
Phone Keith 0409 662 794.
keith.rippon@gmail.com

**VINTAGE RADIO REPAIRS:** electrical mechanical fitter with 36 years experience and extensive knowledge of valve and transistor radios. Professional and reliable repairs. All workmanship guaranteed. $10 inspection fee plus charges for parts and labour as required. Labour fees $35 p/h. Pensioner discounts available on application. Contact Alan on 0425 122 415 or email bigalradioshack@gmail.com

**DAVE THOMPSON** (the Serviceman from SILICON CHIP) is available to help you with kit assembly, project troubleshooting, general electronics and custom design work. No job too small. Based in Christchurch, NZ but service available Australia/NZ wide. Email dave@davethompson.co.nz


**Where do you get those HARD-TO-GET PARTS?**

Where possible, the SILICON CHIP On-Line Shop stocks hard-to-get project parts, along with PCBs, programmed micros, panels and all the other bits and pieces to enable you to complete your SILICON CHIP project.

**SILICON CHIP ON-LINE SHOP**

www.siliconchip.com.au/shop



**KEEP YOUR COPIES OF SILICON CHIP AS GOOD AS THE DAY THEY WERE BORN!**

A superb-looking *SILICON CHIP* binder will keep your magazines in pristine condition.

* Holds up to 14 issues
* Heavy duty vinyl
* Easy wire inserts

ORDER NOW AT
www.siliconchip.com.au/shop


## FOR SALE

**PCB MANUFACTURE:** single to multilayer. Bare board tested. One-offs to any quantity. 48 hour service. Artwork design. Excellent prices. Check out our specials: www.ldelectronics.com.au

**LEDs, BRAND NAME** and generic LEDs. Heatsinks, fans, LED drivers, power supplies, LED ribbon, kits, components, hardware, EL wire. www.led-sales.com.au

tronixlabs.com.au - Australia's best value for hobbyist and enthusiast electronics from adafruit, DFRobot, Freetronics, Raspberry Pi, Genuino and more, with same-day shipping.

**PCBs MADE, ONE OR MANY.** Any format, hobbyists welcome. Sesame Electronics Phone 0434 781 191.
nev-sesame@outlook.com
www.sesame.com.au

## ADVERTISING IN MARKET CENTRE

**Classified Ad Rates:** $32.00 for up to 20 words (punctuation not charged) plus 95 cents for each additional word. Display ads in Market Centre (minimum 2cm deep, maximum 10cm deep): $82.50 per column centimetre per insertion. All prices include GST. Closing date: 5 weeks prior to month of sale. To book, email the text to silicon@siliconchip.com.au and include your name, address & credit card details, or phone Glyn (02) 9939 3295 or 0431 792 293.

## WARNING!

SILICON CHIP magazine regularly describes projects which employ a mains power supply or produce high voltage. All such projects should be considered dangerous or even lethal if not used safely.

Readers are warned that high voltage wiring should be carried out according to the instructions in the articles. When working on these projects use extreme care to ensure that you do not accidentally come into contact with mains AC voltages or high voltage DC. If you are not confident about working with projects employing mains voltages or other high voltages, you are advised not to attempt work on them. Silicon Chip Publications Pty Ltd disclaims any liability for damages should anyone be killed or injured while working on a project or circuit described in any issue of SILICON CHIP magazine.

Devices or circuits described in SILICON CHIP may be covered by patents. SILICON CHIP disclaims any liability for the infringement of such patents by the manufacturing or selling of any such equipment. SILICON CHIP also disclaims any liability for projects which are used in such a way as to infringe relevant government regulations and by-laws.

Advertisers are warned that they are responsible for the content of all advertisements and that they must conform to the Competition & Consumer Act 2010 or as subsequently amended and to any governmental regulations which are applicable.

## Next Month in Silicon Chip

### Silicon Chip's 30th Anniversary

Silicon Chip was first published in November 1987 so next month's issue is our 360th issue! The anniversary issue will include an article on how to make the best use of our website.

### Deluxe Touchscreen eFuse, Part Three

Unfortunately, this article has been delayed due to space contraints. This third and final article explains how to assemble the unit into the case, calibrating it and using it. It will also include some information on how the software works.

### 5-inch touchscreen Micromite 6GHz+ frequency counter

Our new frequency counter is compact and easy to use. It has two inputs which together cover a frequency range from below 10Hz to above 6GHz.

### El Cheapo Modules, part 10: GPS modules

We describe two common GPS modules, their features and how to interface them to an Arduino or Micromite.

***Note: these features are prepared or are in preparation for publication and barring unforeseen circumstances, will be in the next issue.***

**The October 2017** issue is due on sale in newsagents by Thursday, September 28th. Expect postal delivery of subscription copies in Australia between September 28th and October 13th.

## Notes & Errata

**Arduino Stereo Audio Playback and Recording Shield, July 2017:** the circuit diagram (Fig.2 on pages 74 and 75) shows LED2 connected to SCK but the text says it is connected to the CS line. The diagram is correct.

**12V DC Cycling Pump Timer, Circuit Notebook, July 2017:** a 10µF capacitor needs to be connected between pin 7 of IC1 and ground in order for IC1 to operate in pump timer mode.

**New Marine Ultrasonic Anti-Fouling Unit, May & June 2017:** ETD29 3C85 ferrite cores may no longer be available since they have been discontinued by FerroxCube. ETD29 3C90 ferrite cores are suitable substitutes.

**Induction Motor Speed Controller, April-May 2012, December 2012 & August 2013:** contrary to the instructions on page 74 of the May 2012 issue, do not feed 3.3V into CON4 to test the unit without using the mains supply. Instead, feed 3.3V into pin 2 of the ICSP header while making the ground connection to pin 3 of that same connector. This supply can be provided by a PICkit 3 programmer set up to supply power to the chip being programmed. Also, in the circuit diagram (Fig.5 on pages 22 and 23 of the April 2012 issue), the connections to the EXT and O/S DIP switches are shown reversed; EXT should go to pin 18 (RB8) and O/S to pin 17 (RB9).

**Building the RapidBrake, August 2017:** in the calibration instructions on page 85, the first sentence under "Step 1" is incorrect. It should read: "If the jumper at JP1 is set for the Y-axis, go to step 2. If the jumper is set for the X-axis, as before, ..."

## Circuit Ideas Wanted

Got an interesting original circuit that you have cleverly devised? We need it and will pay good money to feature it in the Circuit Notebook pages. We can pay you by electronic funds transfer, cheque (what are they?) or direct to your PayPal account. Or you can use the funds to purchase anything from the Silicon Chip on-line shop, including PCBs and components, back issues, subscriptions or whatever. Email your circuit and descriptive text to editor@siliconchip.com.au

## Advertising Index


Altronics.....CATALOG,85
Control Devices Group.....45
Dave Thompson.....111
Digi-Key Electronics.....3
Electronex.....52
element14.....42
Emona Instruments.....IBC
Freetronics.....15
H K Wentworth/Electrolube.....46
Hare & Forbes.....OBC
Icom Pty Ltd.....14
Jaycar.....IFC,53-60
KCS Trade.....13
Keith Rippon Kit Assembly.....111
Keysight.....50
LD Electronics.....111
LEDsales.....111
Master Instruments.....9
Mastercut Technologies.....43
Mektronics.....47
Microchip Technology.....5,29
Mouser Electronics.....7
Oatley Electronics.....35
Ocean Controls.....8
Pakronics.....10
PCB Cart.....11
Qualieco Circuits Pty Ltd.....51
Rohde & Schwarz.....49
ROLEC OKW.....48
Sesame Electronics.....111
SC Online Shop.....104-105
Silicon Chip Binders.....39
Silicon Chip Wallchart.....99
Tronixlabs.....111
Vintage Radio Repairs.....111

# "Rigol Offer Australia's Best Value Test Instruments"

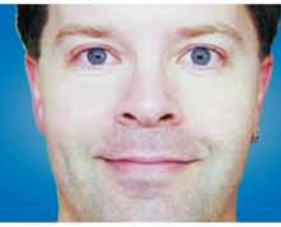

## Oscilloscopes

### RIGOL DS-1000E Series

- 50MHz & 100MHz, 2 Ch
- 1GS/s Real Time Sampling
- USB Device, USB Host & PictBridge

**FROM $469** ex GST

### NEW RIGOL DS-1000Z Series

- 50MHz, 70MHz & 100MHz, 4 Ch
- 1GS/s Real Time Sampling
- 12Mpts Standard Memory Depth

**FROM $579** ex GST

### RIGOL DS-2000A Series

- 70MHz, 100MHz & 200MHz, 2 Ch
- 2GS/s Real Time Sampling
- 14Mpts Standard Memory Depth

**FROM $1,247** ex GST

## Function/Arbitrary Function Generators

### RIGOL DG-1022

- 20MHz Maximum Output Frequency
- 2 Output Channels
- USB Device & USB Host

**ONLY $539** ex GST

### NEW RIGOL DG-1000Z Series

- 30MHz & 60MHz
- 2 Output Channels
- 160 In-Built Waveforms

**FROM $971** ex GST

### RIGOL DG-4000 Series

- 60MHz, 100MHz & 160MHz
- 2 Output Channels
- Large 7 inch Display

**FROM $1,313** ex GST

## Spectrum Analysers

### RIGOL DSA-800 Series

- 9kHz to 1.5GHz, 3.2GHz & 7.5GHz
- RBW settable down to 10 Hz
- Optional Tracking Generator

**FROM $1,869** ex GST

## Power Supply

### RIGOL DP-832

- Triple Output 30V/3A & 5V/3A
- Large 3.5 inch TFT Display
- USB Device, USB Host, LAN & RS232

**ONLY $649** ex GST

## Multimeter

### RIGOL DM-3058E

- 5 1/2 Digit
- 9 Functions
- USB & RS232

**ONLY $673** ex GST

## Buy on-line at www.emona.com.au/rigol


**Sydney**
**Tel** 02 9519 3933
**Fax** 02 9550 1378

**Melbourne**
**Tel** 03 9889 0427
**Fax** 03 9889 0715

**Brisbane**
**Tel** 07 3392 7170
**Fax** 07 3848 9046

**Adelaide**
**Tel** 08 8363 5733
**Fax** 08 83635799

**Perth**
**Tel** 08 9361 4200
**Fax** 08 9361 4300

EMONA

**email** testinst@emona.com.au

**web** www.emona.com.au

# HARE & FORBES MACHINERYHOUSE

"Setting the standard for Quality & Value"

A family owned Australian business
Established 1930

# THE INDUSTRY'S CHOICE!

CNC Machinery | Metal Working | Sheet Metal Fabrication | Wood Working | Workshop & Automotive | Lifting Handling | Cutting Tools | Machine Tool Accessories | Measuring Equipment

## HSS Industrial Centre Drill Set

- 5 piece set
- No. 1, 2, 3, 4, 5
- HSS M2 grade
- Industrial quality

**$40** ~~$47.30~~ (D508)

## Metric Precision HSS Jobber Drill Set

- 25 piece set
- Precision ground flutes
- HSS M2 bright finish
- Range: 1~13mm
- 0.5mm increments

**$79** ~~$99~~ (D1272)

## Imperial Precision HSS Jobber Drill Set

- 29 piece set
- Precision ground flutes
- HSS M2 bright finish
- Range: 1/16 ~ 1/2"
- 1/64" increments

**$85** ~~$104.50~~ (D1282)

## Metric Precision HSS Jobber Drill Set

- 51 piece set
- Precision ground flutes
- 1-6mm in 0.1mm increments
- HSS M2 grade

**$107** ~~$126.50~~ (D1285)

## Metric Carbide Tipped Hole Saw Set

- 8 piece set
- 16, 20, 22, 25, 28, 30, 32, 35mm
- Carbide teeth
- Ø10mm shank

**$84** ~~$99~~ (D108)

## HSS Sheet Metal Step Drill Set

- 3 piece set
- For drilling thin material
- HSS M2 grade
- 4-12mm x 1mm steps
- 6-20mm x 2mm steps
- 6-30mm x 2mm steps

**$70** ~~$82.50~~ (D1071)

## HSS Countersink Set

- 4 piece set
- HSS M2 grade
- 45° angle
- Ø2 ~ Ø5mm
- Ø5 ~ Ø10mm
- Ø10 ~ Ø15mm
- Ø15 ~ Ø20mm

**$60** ~~$71.50~~ (D1051)

## Metric HSS Combination Tap & Drill Set

- 7 piece set
- Designed for up to 3.2mm sheet metal
- HSS M2 grade
- M3, M4, M5, M6, M8, M10
- Includes hex snap-on drive

**$56** ~~$66.55~~ (T0191)

## HSS Countersink Set

- 6 piece set
- HSS M2 grade
- 45° angle
- Ø1.5 ~ Ø6.3mm
- Ø6.3 ~ Ø8.3mm
- Ø8.3 ~ Ø10.4mm
- Ø10.4 ~ Ø12.4mm
- Ø12.4 ~ Ø16.5mm
- Ø16.5 ~ Ø20.5mm

**$70** ~~$82.50~~ (D1061)

## Metric HSS Hole Saw Set

- 11 piece set
- M42 Bi-Metal high speed steel
- 19, 22, 25, 32, 35, 38, 44, 51, 57, 64, 76mm
- Includes 3/8" & 1/2" arbor shank & pilot drill

**$89** ~~$110~~ (D102)

## EF-5S - Engineers File Set

- 200mm hardened and tempered files
- Second cut: Flat, 1/2 Round, Round, Square, Triangular
- Includes carry case

**$33** ~~$42.35~~ (F100)

## HS-2S - Throatless Hand Lever Shear

- 1.2mm mild steel capacity
- Cast steel construction
- Tool steel quality blades
- Gear drive shearing action

**$225** ~~$253~~ (S184)

## DB-180 - Digital Bevel Box

- 180° range
- Auto shut off
- Magnetic base
- 0.1° resolution

**$66** ~~$78.65~~ (M977)

## Digital Caliper

- 150mm / 6"
- Metric, inch & fraction
- 4-way measuring
- Includes battery

**$29** ~~$38.50~~ (M738)

## Alloy Steel Tap & Die Set

- 32 piece set
- M3 ~ M12 alloy steel
- Includes button die holder wrench, tap wrench, screw pitch gauge, screwdriver

**$60** ~~$71.50~~ (T012)

## TBRS-25 - Manual Tube Bender

- Includes 8 formers
- 3/4" & 1" square
- 3/8" 1/2", 9/16", 5/8", 3/4", 7/8" round

**$198** ~~$220~~ (T055)

ALL THIS & MORE IN STORE OR ONLINE

- JAMES
Staff Member

UNIQUE PROMO CODE
SCSEP
ONLINE OR INSTORE!

## TCS-3 - Mobile Tool Cabinet Seat

- 3 x drawers with ball bearing slides
- 420 x 235mm padded seat
- 2 x magnetic side trays
- 406mm seat height
- 360° swivel wheels

**$75** ~~$93.50~~ (A001)

## BD-325 - Bench Drill

- 16mm drill capacity
- 2MT spindle
- 12 spindle speeds
- Swivel & tilt table
- 1hp, 240V motor

**$289** ~~$319~~ (D590)

## VIPER 150 - Multi-Function Inverter Welder-MIG-MMA

- 30 - 150 Amps
- 240V - 10amp
- Gas / gasless
- 15% @ 150A duty cycle

**$473** ~~$495~~ (W245)

VIEW AND PURCHASE THESE ITEMS ONLINE AT
www.machineryhouse.com.au/SCSEP

| SYDNEY | BRISBANE | MELBOURNE | PERTH |
|---|---|---|---|
| (02) 9890 9111 | (07) 3274 4222 | (03) 9212 4422 | (08) 9373 9999 |
| 1/2 Windsor Rd, Northmead | 625 Boundary Rd, Coopers Plains | 1 Fowler Rd, Dandenong | 11 Valentine St, Kewdale |

Specifications & Prices are subject to change without notification. All prices include GST and valid until 30-09-17

9_SC_240817